SF5 Spreader

ILLUSTRATED PARTS BREAKDOWN

Page 1 | Hitch Assembly Opt
Page 2 | Hitch Assembly (Scale opt)
Page 3 | Axle Assembly
Page 4 | Axle Assembly (Scale opt)
Page 5 | Floor & Apron
Page 6 | Hopper & Chassis
Page 7 | Pump Assembly
Page 8 | Wolverine- Pump Assembly
Page 9 | Hydraulics
Page 10 | Manifold Components
Page 11 | Manifold Cover
Page 12 | Gearbox Components
Page 13 | Rear Gate
Page 14 | Dual Conveyor Assembly(Base assy)
Page 16 | Rolling Latch Assembly
Page 17 | Rolling Assembly
Page 18 | Dual Conveyor Assembly
Page 20 | Dual Conveyor Assembly (Belting)
Page 22 | Dual Conveyor Assembly Hydraulics xxxxx-96537
Page 23 | Dual Conveyor Assembly Hydraulics SN 96538-xxxxx
Page 24 | Switchbox
Page 25 | Oil Cooler Option
Page 26 | Rear Light Package Option
Page 27 | Dual Side Deflector Option (894003 - 8” Tall - Jan 2025+)
Page 28 | Flicker Option Assembly



ASSEMBLY DIAGRAMS | PARTS LISTINGS | REPLACEMENT PARTS

USE THIS PARTS BOOK TO IDENTIFY AND ORDER PEQUEA REPLACEMENT PARTS

FERTILIZER SPREADER

SF5

Fertilizer Spreader

Rev. PQ110926 **Lang**. EN



DIMENSIONS & WEIGHT

Payload	10,000 lb (5 Ton)	Hopper Width	72 in
Empty Weight	3,600 lb	Hopper Length	10 ft (120 in)
Overall Height	76 in	Floor Width	12 in
Overall Width	128 in	Capacity	4.5 cu yd (Struck), 5.2 cu yd (Heaped)
Overall Length	174 in	Overall Length	174 in

POWER & HYDRAULICS

Power Requirements	50 hp
Hydraulics	PTO Pump
Flow Control	Adjustable Flow Control for Conveyors and Spinners

CONSTRUCTION & RUNNING GEAR

Floor & Chain	**3/4” Stainless Steel Mesh**
Axle	**Single Axle**
Tire & Wheel	**21.5L x 16.1**
Attachments	**Adjustable Width Conveyor with Break-Away Pivot**

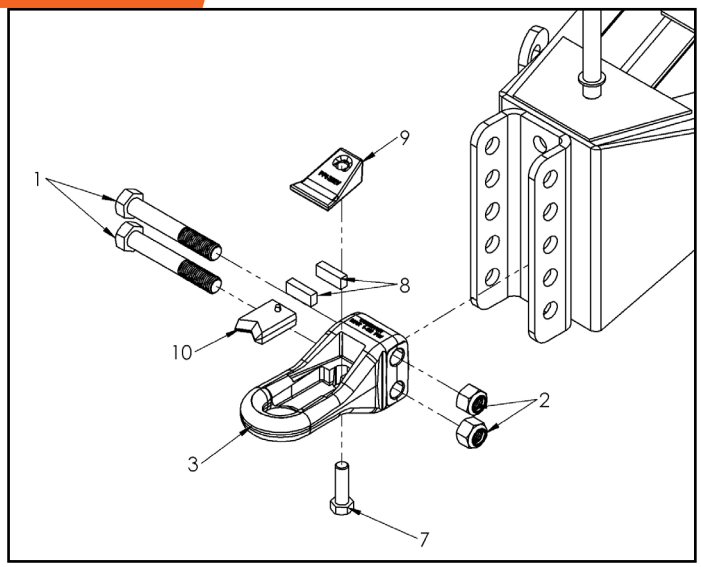

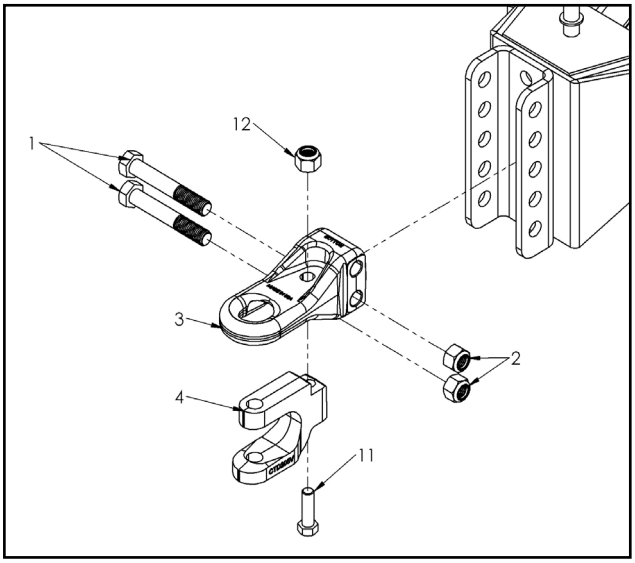

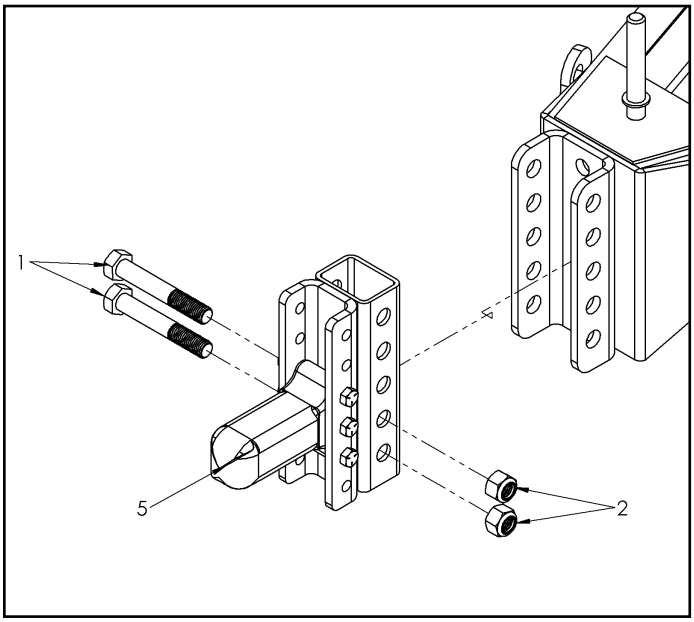

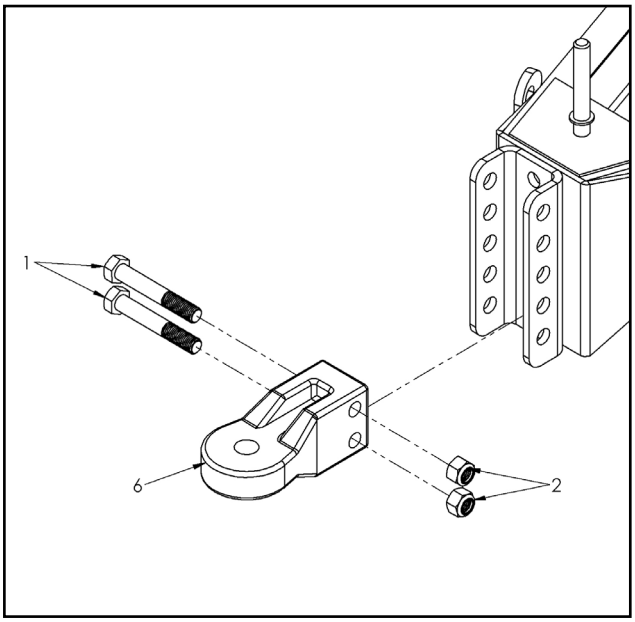

Ref#	Description	Part#	Qty
1	Hex Head Bolt G8, 1-8 x 6-1/2”	000791	2
2	Nylon Lock Nut, 1-8	001012	2
3	Pintle Hitch, Perfect Hitch Opt.	896285	1
4	Clevis Hitch Attachment	896309	1
5	Hitch Coupler Adaptor (Kit)	896336	1
6	Bull Pull Swivel Hitch	896215	1
7	Grade 5 Bolt, CTD	896429	1
8	Neoprene Cushion	896427	2
9	Top Plate	896426	1
10	V-Block	896428	1
11	Grade 8 Bolt, CTD 3/4-10 x 5”	896430	1
12	Hex Nut, CTD 3/4-10 Top Lock Gr8	896431	1

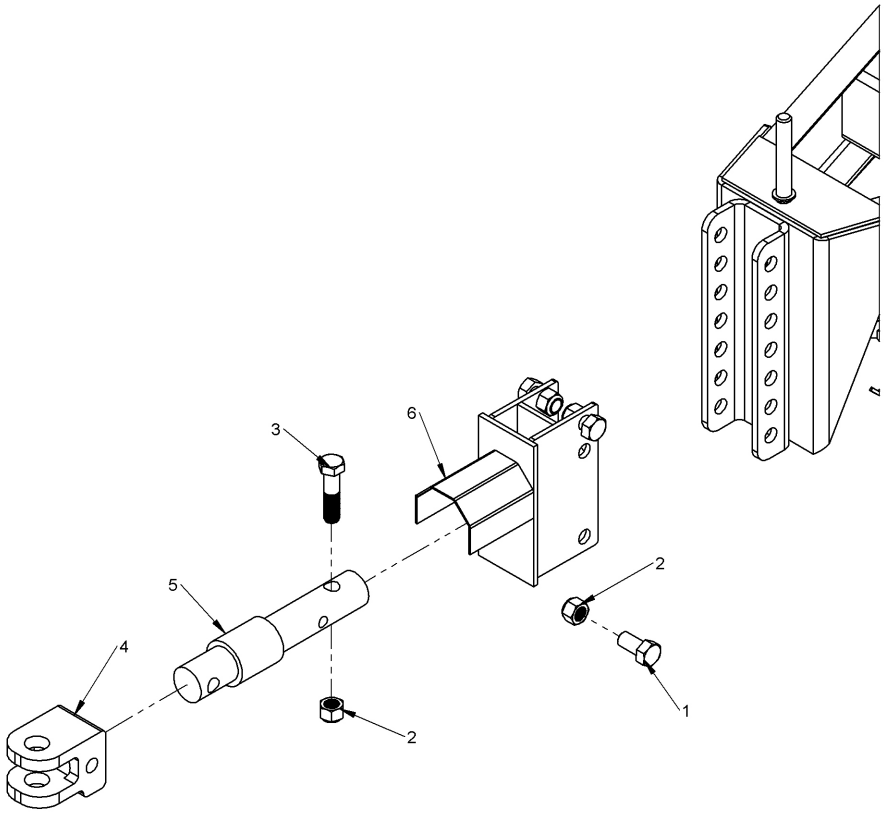

Ref#	Description	Part#	Qty
1	Hex Head Bolt G8, 1-8 x2	000779	4
2	Nylon Lock Nut, 1-8	001012	5
3	Hex Head Bolt G8, 1-8 x2	000783	1
4	Clevis Hitch Attachment w/ Hardware	896307	1
5	Hitch Weigh Bar	896305	1
6	Weigh Bar Reciever, Bolt-On	896290	1

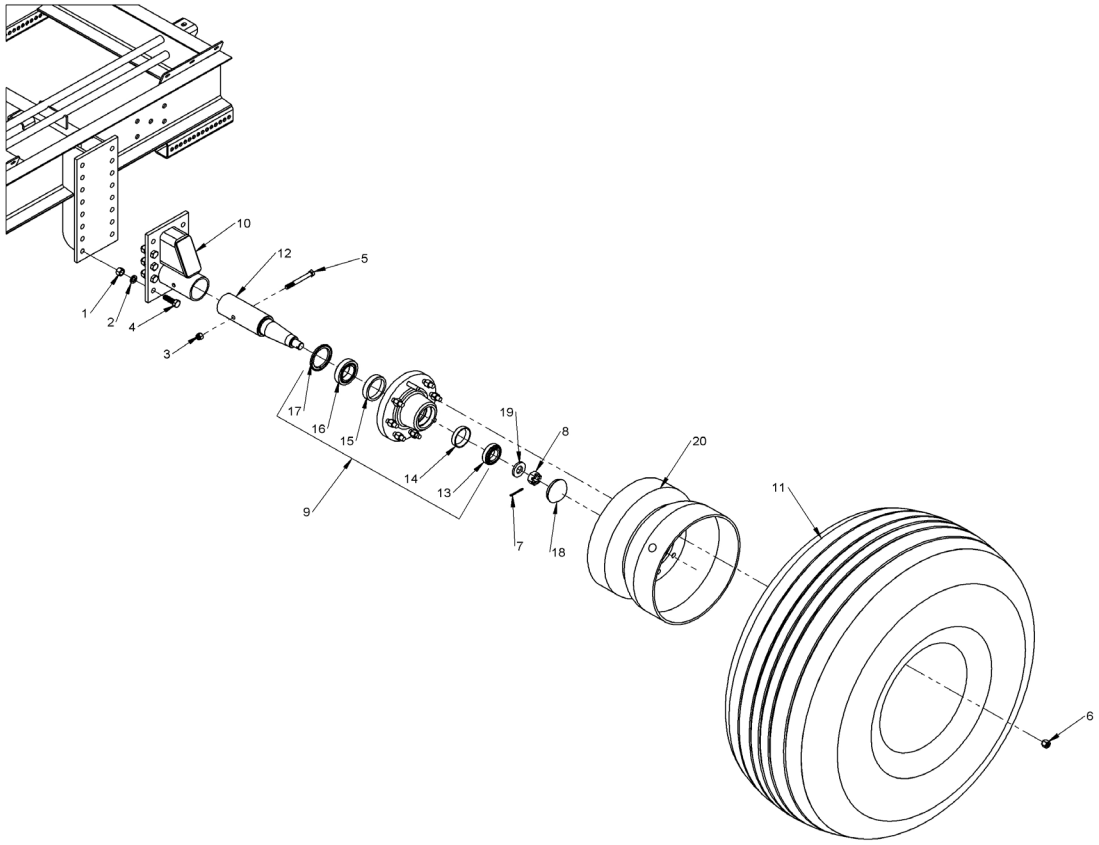

Ref#	Description	Part#	Qty
1	5/8” Hex Nut	000970	16
2	5/8” Lock Washer	000860	16
3	1/2” Nylon Lock Nut	000950	2
4	5/8” x 2” Hex Head Bolt	000615	16
5	1/2” x 4-1/2” Hex Head Bolt Gr 5	000500	2
6	Lug Nut, 5/8”	300278	16
7	5/32 x 1-3/4 Cotter Pin	300282	2
8	Castle Nut	300275	2
9	Complete Hub Assembly, 75-8	830045	2
10	Spindle Bracket Assembly	801403	2
11	Tire, 10 Ply, 21.5L x 16.1	830258	2
12	Spindle, 3” x 14”, 75-8 Hub	890439	2
13	Bearing LM501349	300248	2
14	Race LM501310	300247	2
15	Race 382A	101428	2
16	Bearing 387AS	300430	2
17	Grease Seal	300431	2
18	Hub Cap	300249	2
19	Hub Washer	890585	2
20	Wheel, 16.1 x 16, 8 Bolt	830047	2

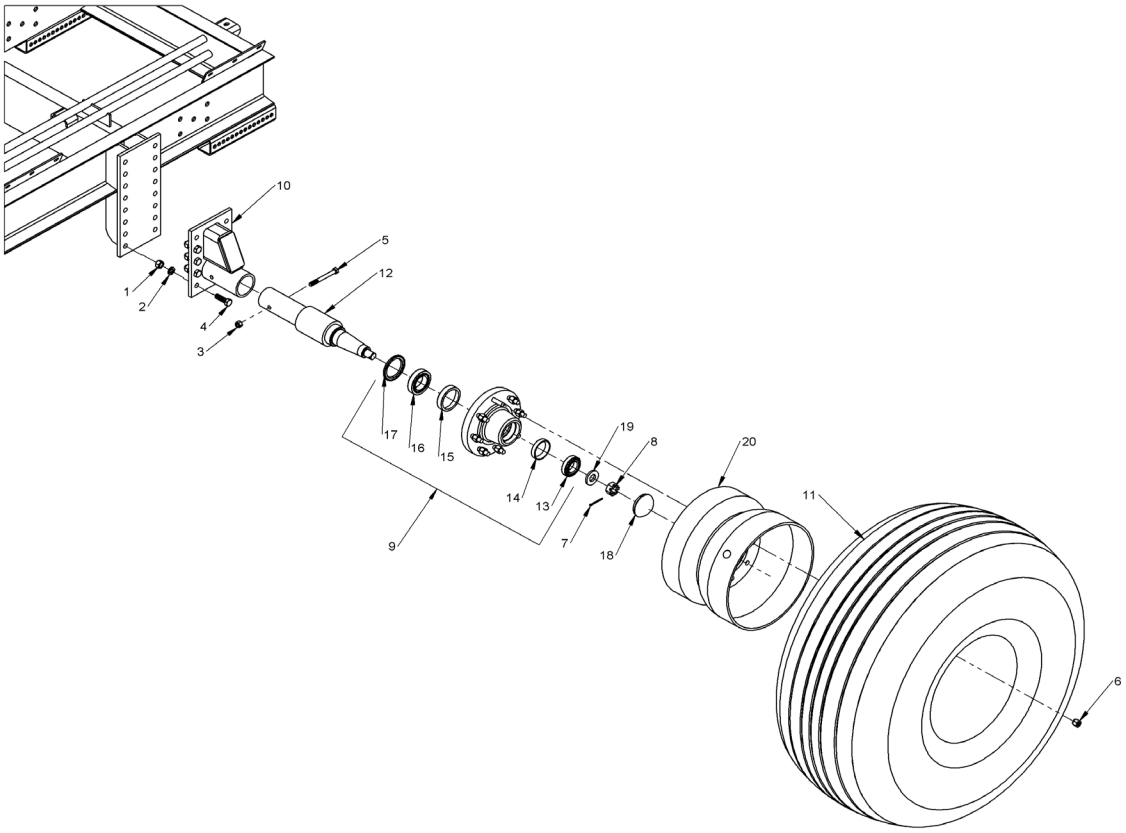

Ref#	Description	Part#	Qty
1	5/8” Hex Nut	000970	16
2	5/8” Lock Washer	000860	16
3	1/2” Nylon Lock Nut	000950	2
4	5/8” x 2” Hex Head Bolt	000615	16
5	1/2” x 4-1/2” Hex Head Bolt	000500	2
6	Lug Nut, 5/8”	300278	16
7	5/32 x 1-3/4 Cotter Pin	001231	2
8	Castle Nut	300275	2
9	Complete Hub Assembly, 75-8	830045	2
10	Spindle Bracket Assembly, Weigh Bar	896298	2
11	Tire, 10 Ply, 21.5L x 16.1	830258	2
12	Spindle Weigh Bar, 2.875 x 19.84	896306	2
13	Bearing LM501349	300248	2
14	Race LM501310	300247	2
15	Race 382A	101428	2
16	Bearing 387AS	300430	2
17	Grease Seal	300431	2
18	Hub Cap	300249	2
19	Hub Washer	890585	2
20	Wheel, 16.1 x 16, 8 Bolt	830047	2

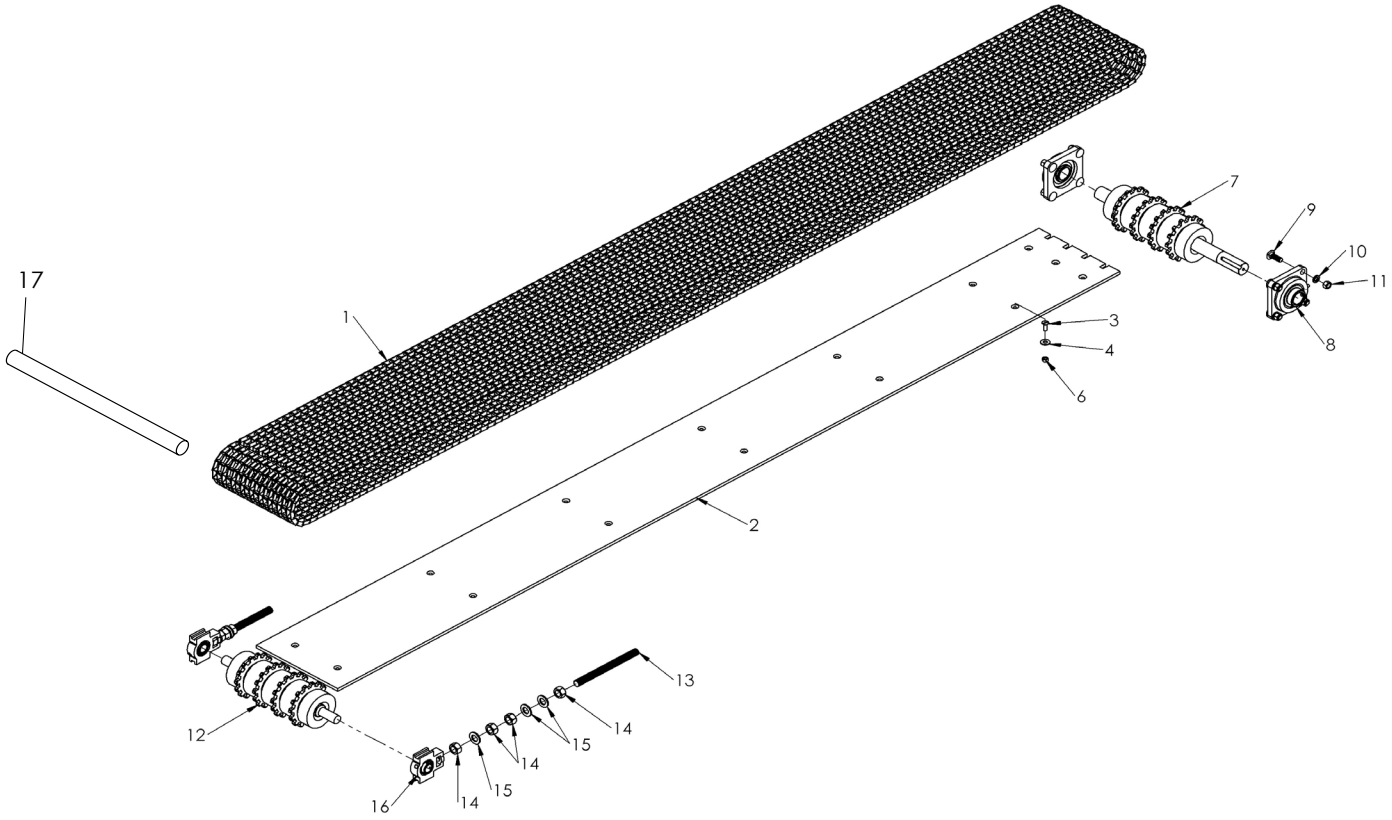

Ref#	Description	Part#	Qty
1	Stainless Steel Mesh Floor Apron	896041	21' Feet
2	3/8" x 12" UHMW Floor Board	896068	1
3	3/8" x 1-1/4" Countersunk Bolt, Stain-	000367SS	15
4	3/8 USS Flat Washer, Stainless	001035SS	15
6	3/8" Nylon Lock Nut, Stainless	003000SS	15
7	Spur Pulley, Rear	896062	1
8	1-1/2" Shaft, 4 Bolt Flange Bearing	400810	2
9	1/2" x 1-1/2" Carriage Bolt	000155	8
10	1/2" Split Lock Washer	000840	8
11	1/2" Hex Nut	000940	8
12	Spur Pulley, Front	896078	1
13	3/4" x 8-7/8" All-Thread	801175	2
14	3/4" - 10 Hex Nut	000975	8
15	3/4 USS Flat Washer	001086	6
16	1" Take Up Bearing	806106	2
17	12" Stainless Connecting Pin	896467	1

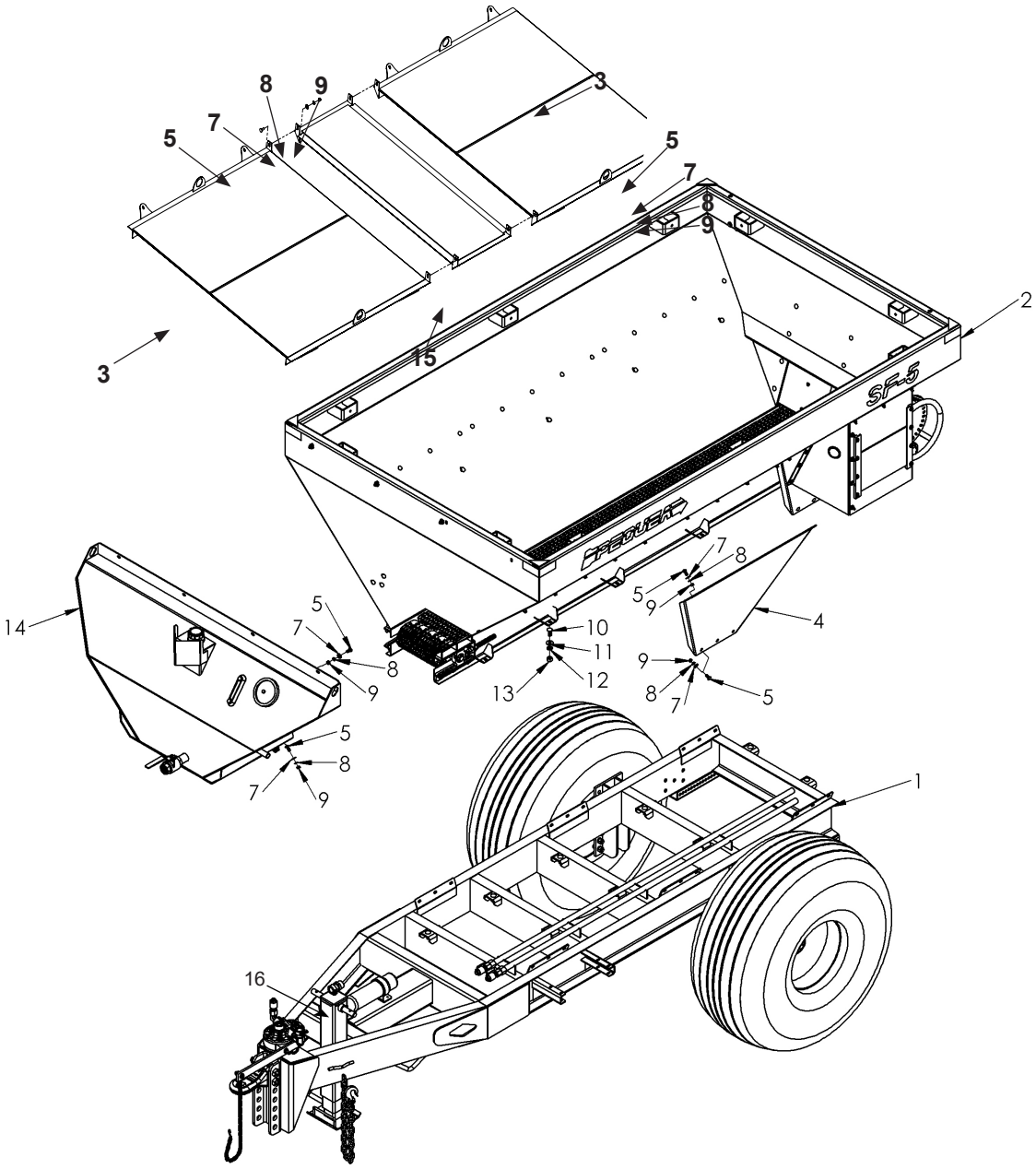

Ref#	Description	Part#
1	Chassis Frame	896000
2	5 Ton Hopper	896003
3	Stainless Steel Grate Insert	896435
4	Panel Support	896043
5	3/8-16 x 1 Carriage Bolt,Stainless	000125SS
6	3/8-16 x 1-1/4 Carriage Bolt, Stainless	000150SS
7	3/8 Flat Washer, Stainless	001035SS
8	3/8 Lock Washer, Stainless	000820SS

Ref#	Description	Part#
9	3/8-16 Hex Nut, Stainless	000915SS
10	1/2 x 2” Carriage Bolt	000155
11	1/2 Flat Washer	001055
12	1/2 Lock Washer	000840
13	1/2 Hex Nut	000940
14	40 Gal Oil Tank	896125
15	SS Center Grate Insert	896439
16	10K Drop Leg Jack, (Side Wind)	100427

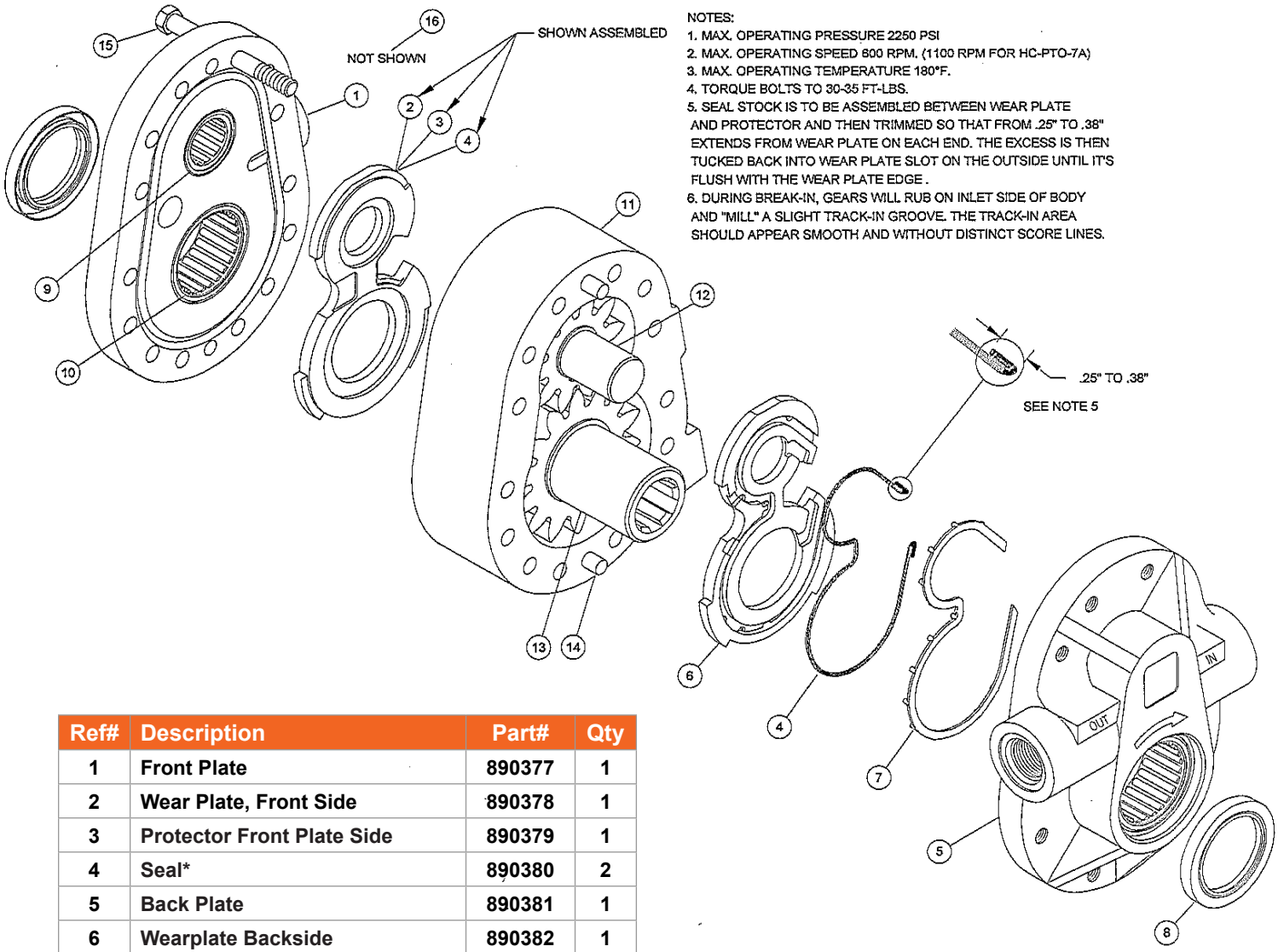

Ref#	Description	Part#	Qty
1	Front Plate	890377	1
2	Wear Plate, Front Side	890378	1
3	Protector Front Plate Side	890379	1
4	Seal*	890380	2
5	Back Plate	890381	1
6	Wearplate Backside	890382	1
7	Protector Back Plate Side*	890383	1
8	Shaft Seal*	890384	2
9	Idler Shaft Bearing	890385	2
10	Drive Shaft Bearing	890386	2
11	Body HC-PTO-2A	890387	1
12	Gear Assembly	890388	1
13	Drive Gear Assembly	890389	1
14	Dowel Pin	890390	2
15	Cap Screw	890391	12
16	Seal Kit	890392	1

Note: All items with * are included in Seal Kit.

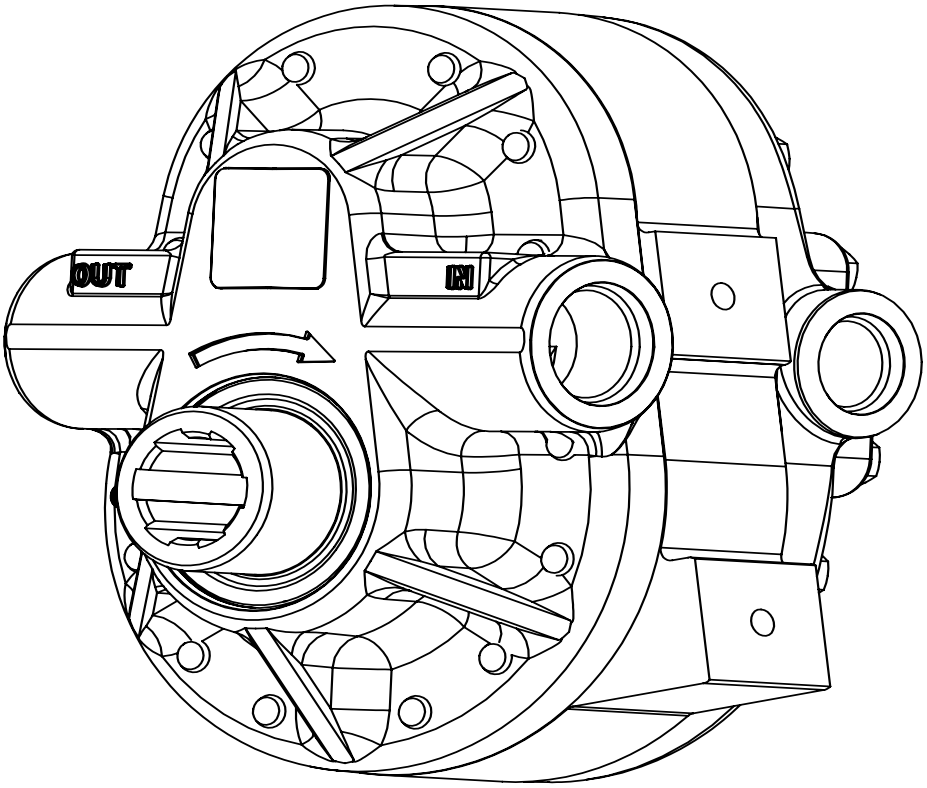

Ref#	Description	Part#
1	Wolverine- Pump Assembly	890178
2	Seal Kit	890189

The Wolverine Pump is for serial numbers including 105941 and up. Any new orders for pumps will be for the Wolverine Pump.

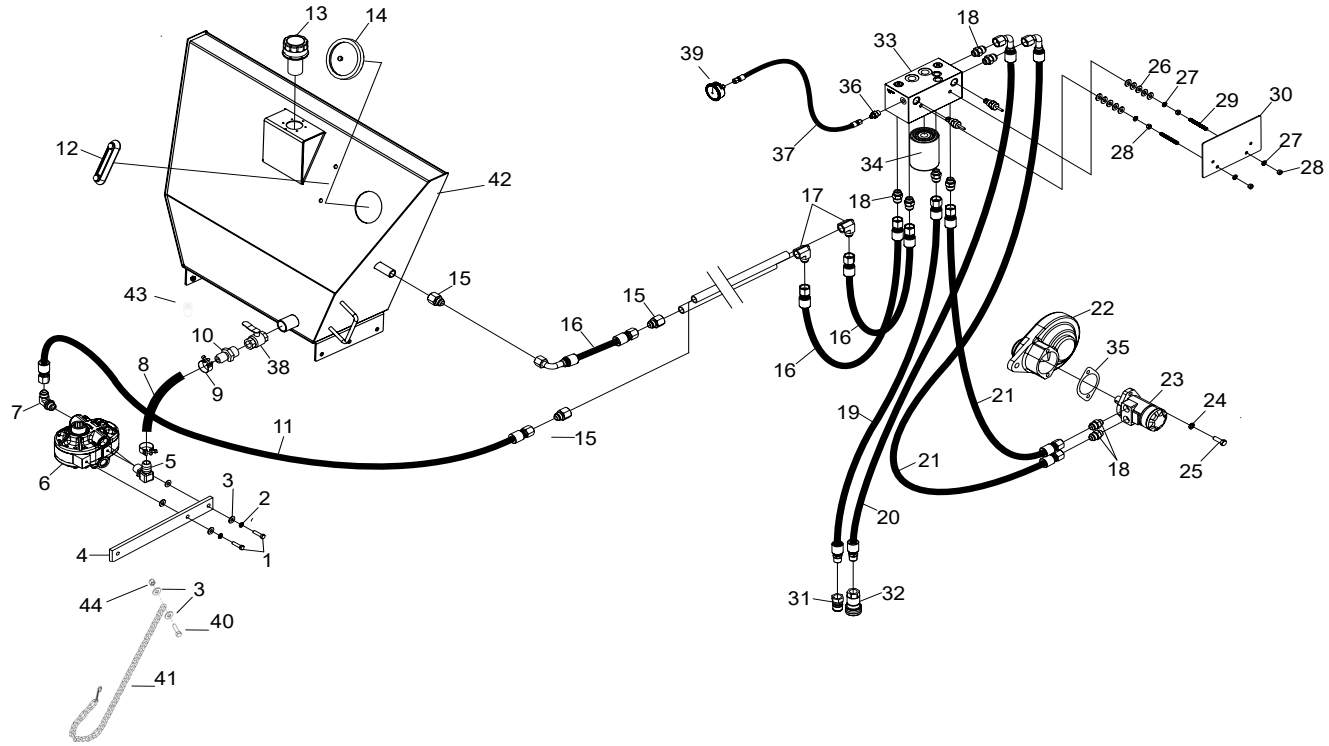

Ref#	Description	Part#
1	3/8” x 1-1/2” Hex Head Bolt	000280
2	3/8” Split Lock Washer	000820
3	3/8” Flat Washer	001035
4	Pump Holder	801052
5	90 Degree Elbow (20HB x 16MB)	290080
6	PTO Pump	890178
7	90 Degree Elbow (12MJ x 12MB)	290022
8	55” Suction Hose	830680
9	1-1/2” SV Hose Clamp	290169
10	Straight Fitting (20HB x 20MP)	290187
11	95” Hose Assembly (12FJX x 12FJX)	830687
12	Hydraulic Tank Sight Gauge	290054
13	4” Tank Filler Breather Cap	290142
14	6” Tank Door	290044
15	Straight Fitting (12MJ x 12FP)	290019
16	27” Hose Assembly	830336
17	90 Degree Elbow (12MJ x 12FP)	290093
18	Straight Fitting (12MJ x 10MB)	290001
19	58” Hose Assembly (8FJX - 8MP)	896422
20	53” Hose Assembly (8FJX - 8MP)	896421
21	28” Hose Assembly (12FJX x 12FJX)	896420

Ref#	Description	Part#
22	Single Drive Gear Box	891217
23	Drive Motor	896156
24	Lockwasher, 1/2	000840
25	1/2 x 1-1/2 Hex Head Bolt	000435
26	3/8” Flat Washer	001035
27	3/8” Lock Washer	000820
28	3/8” Hex Nut	000915
29	3/8” x 3-1/4” Threaded Rod	902245
30	Manifold Face Plate	896418
31	1/2” Male Ag Coupling	290105
32	1/2” Female Ag Coupling	290183
33	Complete Manifold	890940
34	Oil Filter	890962
35	2 Bolt Flange Gasket	830251
36	Straight Fitting,- #4 MJ x #6 MB	700908
37	16” Hose Assembly (4FJX x 4FJX)	830812
38	1-1/4” Full Ported Brass Ball Valve	830355
39	Pressure Gage	290293
40	3/8 x 1-3/4 Hex Head Bolt	000285
41	PTO Pump Chain Assembly	896283
42	40 Gal Hydraulic Tank	896124
43	#8 Hex Socket Pipe Plug	290025
44	3/8 Nylon Lock Nut	003000

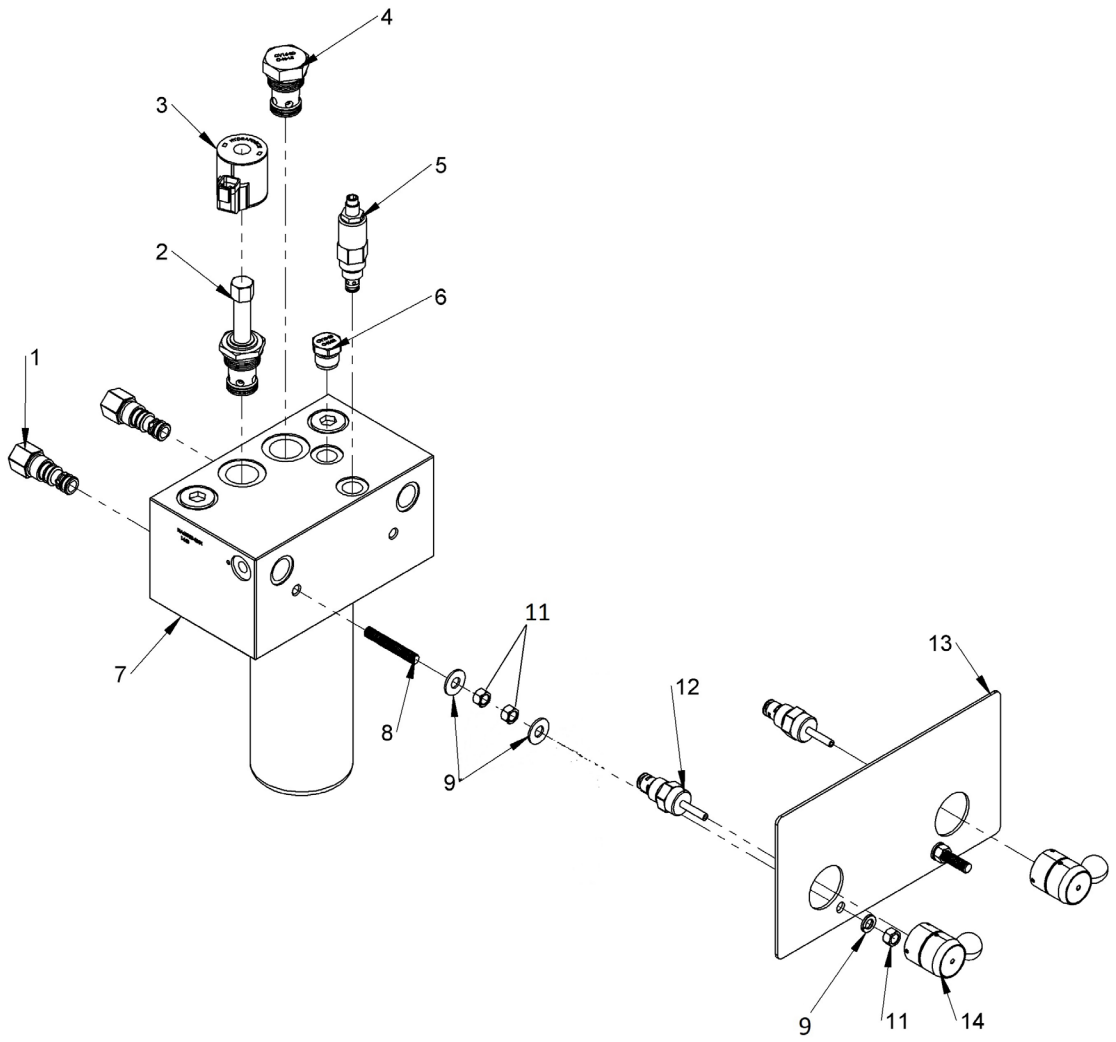

Ref#	Description	Part#
1	EP10-S35 40 Directional Valve	806140
2	SV16-21 2 Way N/O Poppet Valve	830320
3	Solenoid Valve Coil (4303712)	830325
4	CV16-20-0-N-15 Check Valve	830801
5	Relief Valve	830535
6	CV10-20-0-N-02 Check Valve	830802
7	Hydraulic Manifold with all valves in cluded	890940

Ref#	Description	Part#
8	3/8” x 2-1/2” Threaded Rod	890951
9	3/8” Flat Washer	001035
10	3/8” Lock Washer	000820
11	3/8” Hex Nut	000915
12	MR10-20A Flow Control Valve	806136
13	Manifold Face Plate	896418
14	Control Knob, Detent	896413

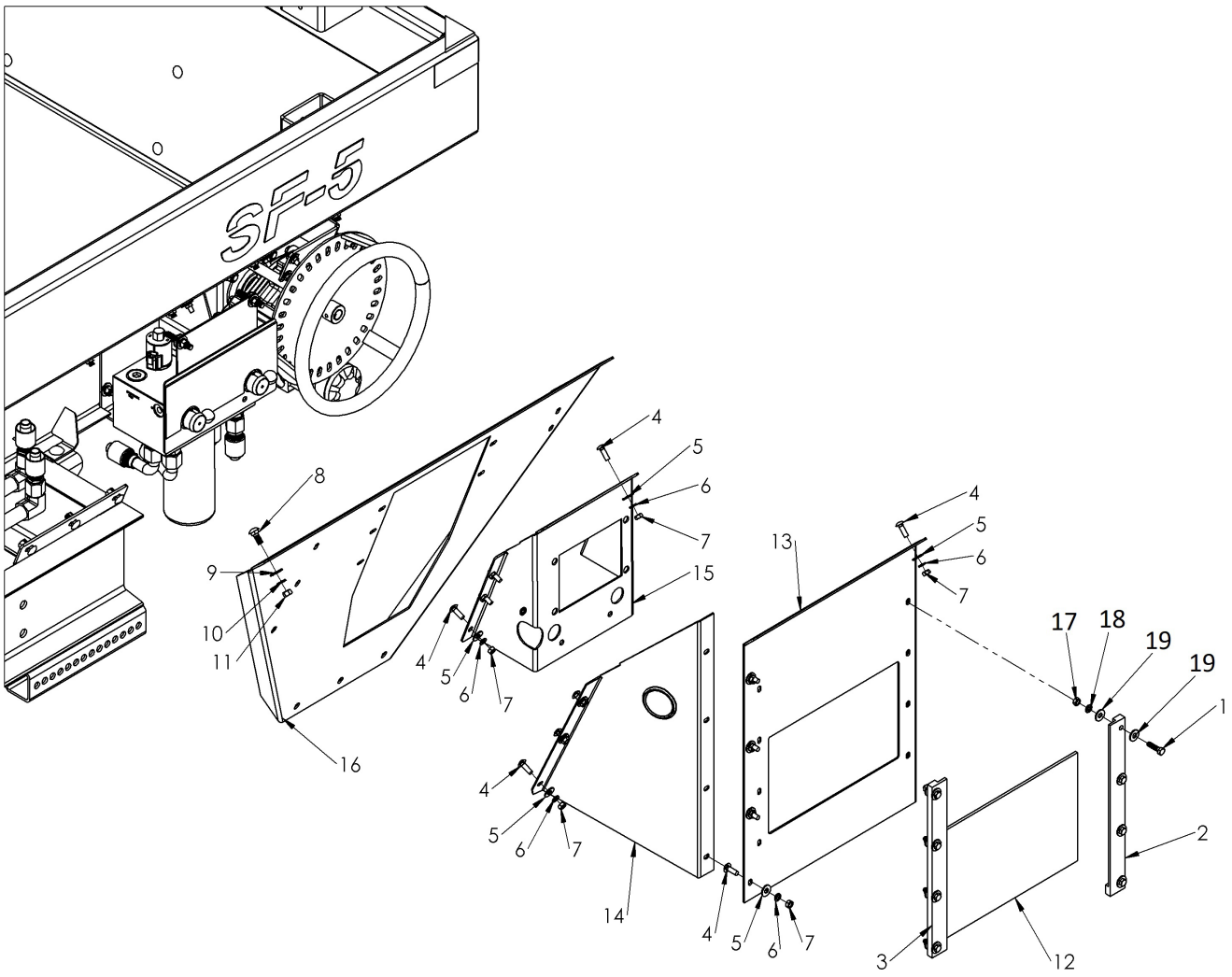

Ref#	Description	Part#
1	5/16” x 1-1/4” Hex Head Bolt	000230
2	Manifold Window Slide, Right	890456
3	Manifold Window Slide, Left	890455
4	5/16-18 X 1 Car. Bolt SS 18-8	000124SS
5	5/16” USS Flat Washer	001030SS
6	5/16” Lock Washer, Stainless	000810SS
7	5/16” Hex Nut, Stainless	000910SS
8	3/8” x 1” Carriage Bolt, Stainless	000125SS

Ref#	Description	Part#
9	3/8” USS Flat Washer, Stainless	001035SS
10	3/8” Lock Washer, Stianless	000820SS
11	3/8” Hex Nut, Stainless	000915SS
12	Flow Control Cover	890200
13	Manifold Cover Plate	896051
14	Mount, Manifold Protector	896056
15	SF5 Manifold Mount	896054
16	Panel Support, Hyd Controls	896052
17	5/16” Hex Nut	000910
18	5/16” Lock Washer	000810
19	5/16” USS Flat Washer	001030

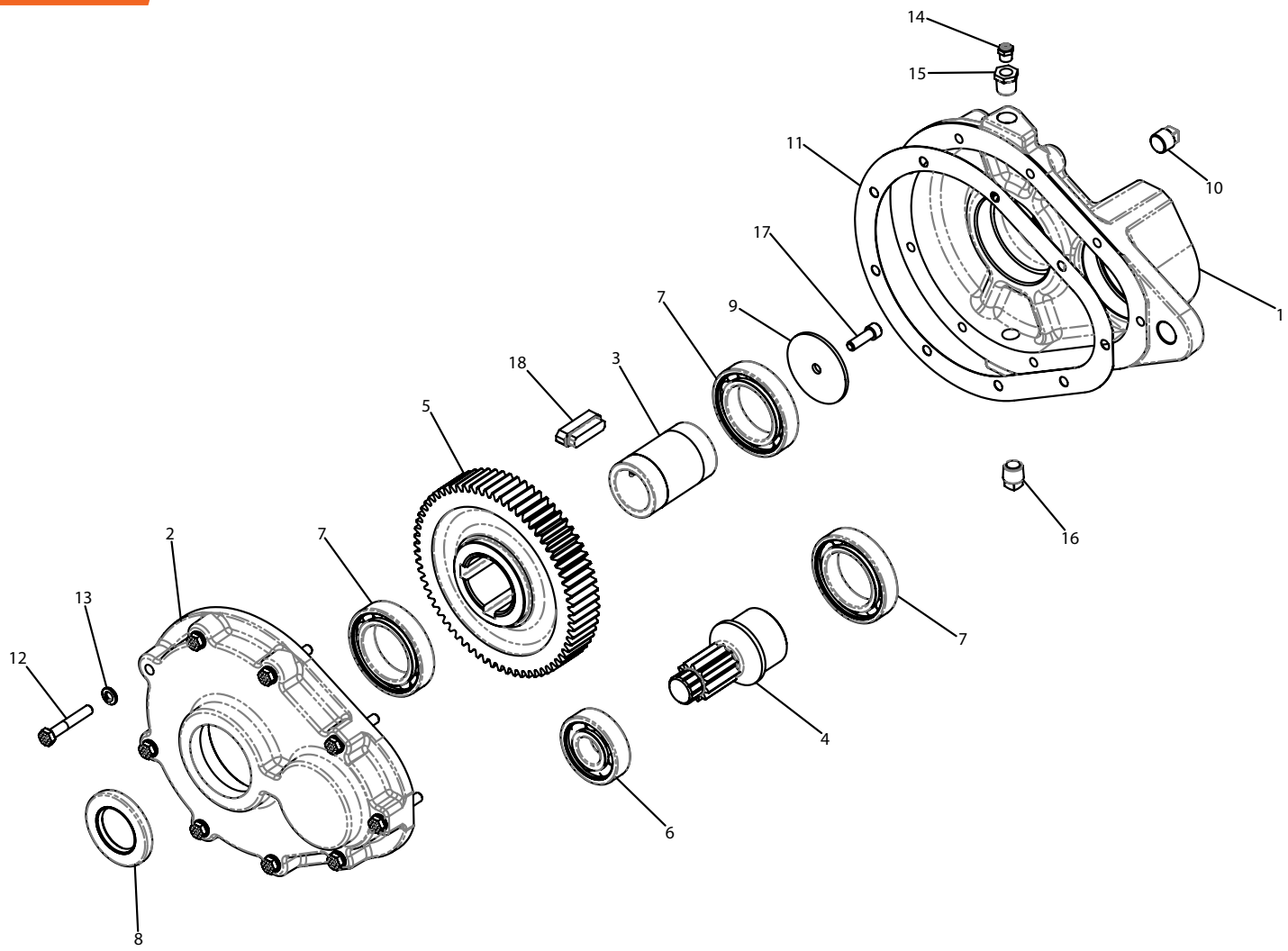

Ref#	Description	Part#
1	Outer Gearbox Housing	801419
2	Inner Gearbox Housing	801420
3	Output Shaft Housing	801421
4	Input Gear, 11 Tooth	801422
5	Output Gear, 67 Tooth	801423
6	6305 C3 Ball Bearing	801424
7	6010 C3 Ball Bearing	801425
8	Oil Seal, 1.50-2.623-.313	801426
9	Washer, 2.50 x .34 x .120	801427

Ref#	Description	Part#
10	Square Head Plug, 3/8”-18 NPT w/ 3M	801428
11	Gasket	801429
12	5/16” x 2” Hex Head Bolt, Gr. 8	000122
13	5/16” Lock Washer	000810
14	Breather Plug, 1/8”-27	801430
15	Bushing, 3/8” x 1/8”	801431
16	Square Head Plug, 3/8”-18 NPT	801432
17	5/16” x 1” Bolt, Gr. 8	801434
18	Step Key, .50/.375x.664x1.760	801433

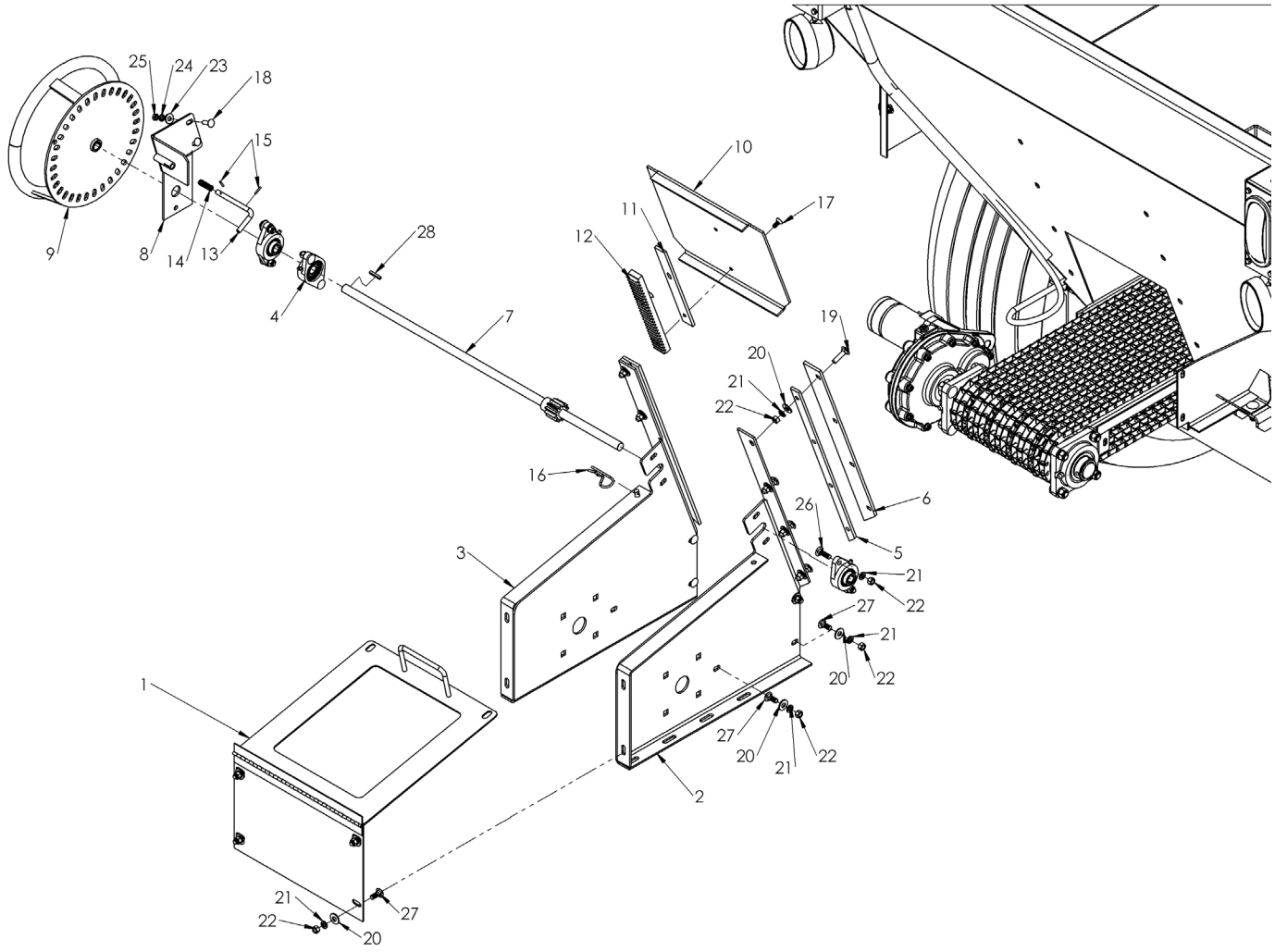

Ref#	Description	Part#
1	Rear Sprocket Door Assembly	896249
2	Rear Panel, RH	896248
3	Gearbox Mount, Rear LH	896018
4	3/4” Bearing, 2 Bolt	806108
5	Track Spacer	896015
6	Endgate Track, Outer	896014
7	Endgate Shaft	896020
8	Endgate Latch Assembly	896055
9	Endgate Wheel Assembly	830543
10	Gate	896019
11	Gear Rack Shim	806200
12	#8 Gear Rack	806085
13	Latch Pin	806052
14	Endgate Latch Spring	806166

Ref#	Description	Part#
15	1/8 x 3/4 Roll Pin, Stainless Steel	000561
16	Cotter Pin	100216
17	5/16 x 3/4 Countersunk Bolt, Stainless	000301SS
18	5/16-18 X 1 Carriage Bolt, Stainless	000124SS
19	3/8-16 x 1.50 Carriage Bolt, Stainless	000151SS
20	3/8 Flat Washer, Stainless	001035SS
21	3/8 Lock Washer, Stainless	000820SS
22	3/8 Hex Nut, Stainless	000915SS
23	5/16 Flat Washer, Stainless	001030SS
24	5/16 Lock Washer, Stainless	000810SS
25	5/16 Hex Nut, Stainless	000910SS
26	3/8-16 x 1.25 Carriage Bolt, Stainless	000150SS
27	3/8-16 x 1 Carriage Bolt, Stainless	000125SS
28	Key, 3/16 x 1-1/4	401264

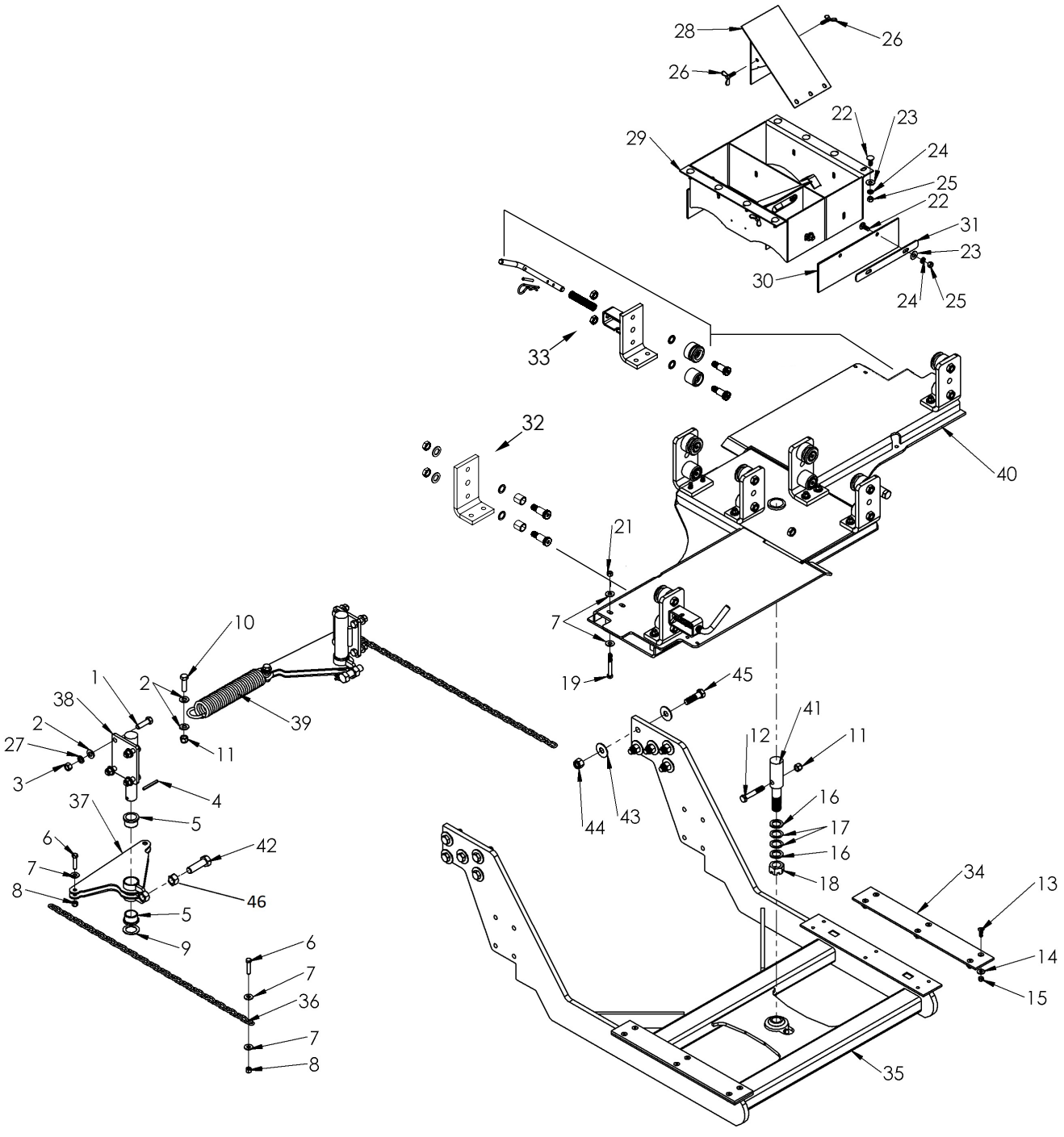
28
26
26
22
23
29
24
25
22
31
23
30
24
25
33
32
40
21
7
19
10
1
2
38
2
27
3
39
11
4
37
5
6
7
8
42
46
5
9
6
7
36
7
8
45
41
12
11
16
17
16
18
44
43
34
13
14
15
35

Ref#	Description	Part#
1	1/2-13 x 1-3/4 Hex Head Bolt	000445
2	1/2 SAE Flat Washer	001061
3	1/2-13 Hex Nut	000940
4	1/4 x 2-1/4 Roll Pin	502282
5	1.25 ID x 1.50 OD Bushing	703893
6	3/8-16 x 1-3/4 Hex Head Bolt	000285
7	3/8 USS Flat Washer	001035
8	3/8 Nylon Lock Nut	003000
9	1-1/4 x 1-7/8 Machinery Bushing	500185
10	1/2-13 x 1-3/4 Hex Head Bolt	000445
11	1/2" Nylon Locknut	000950SS
12	1/2-13 x 3" Hex Head Bolt, Stainless	000470SS
13	Flat Socket Screw, 5/16 x 1	000166SS
14	5/16 USS Flat Washer	001030SS
15	5/16 Nylon Lock Nut	002999SS
16	1 x 1-1/2 x .25 Machinery Bushing	001006
17	1 x 1-1/2 x .125 Machinery Bushing	001008
18	Castle Nut, Plated	896462
19	3/8-16 x 3" Hex Head Bolt Gr. 8	000306
20	3/8 Lock Washer	000820
21	3/8-16 Nylon Lock Nut Grade 8	003004
22	3/8-16 x Carriage Bolt, Stainless	000125SS
23	3/8 USS Flat Washer, Stainless	001035SS
24	3/8 Lock Washer, Stainless	000820SS

Ref#	Description	Part#
25	3/8-16 Hex Nut, Stainless	000915SS
26	5/16-18 Wing Bolt	896208
27	1/2 Lock Washer	000840
28	Slider, Diverter Box	896205
29	Diverter Box Weldment	896080
30	Belting, Diverter Box	896311
31	Belting Bar, Diverter Box	896310
32	Rolling Assembly	896397
33	Rolling Latch Assembly	896388
34	UHMW Slide	896404
35	Frame Conveyor Mount	896086
36	Chain	896243
37	Latch Pivot Triangle Wldmt	896339
38	Latch Pivot Shaft Wldmt	703918
39	Extension Spring	200041
40	Base Plate Weldment	896380
41	Center Swivel Spindle	896406
42	3/4-10 x 2-1/2 Hex Head Bolt	000720
43	5/8 USS Flat Washer	001075
44	5/8-11 Nylon Lock Nut	000972
45	5/8-11 x 2-1/4 Hex Head Bolt	000626
46	3/4” Jam Nut	000976
47	Ball Joint	896373

ROLLING LATCH ASSEMBLY

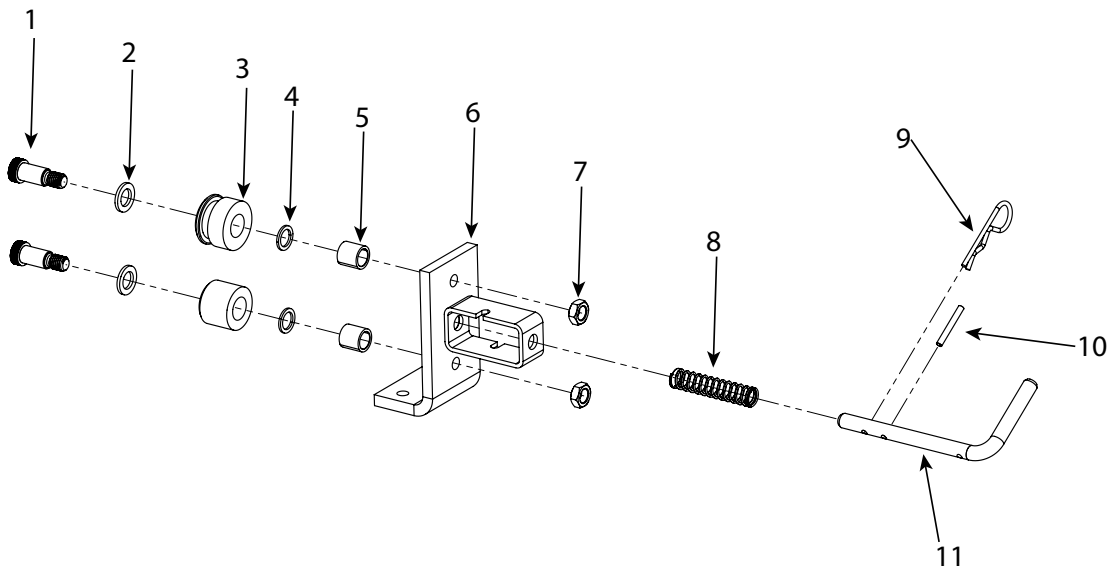

Ref#	Description	Part#
1	Roller Shoulder Bolt	896394
2	3/4 X 1-1/4 Machinery Bushing, 10ga Zinc	400146Z
3	Top Roller	896391
4	Roller Thrust Washer	896392
5	RSI-1216-16	896393
6	Latching Roll Weldment	896396
7	5/8-11 Hex Jam Nut SS 18-8	000681SS
8	Latch Spring	896276
9	Hairpin Cotter,- .178 Wire X 3	507340
10	1/4 X 2 Roll Pin Zinc	500017
11	Latch Pin	896395

ROLLING ASSEMBLY

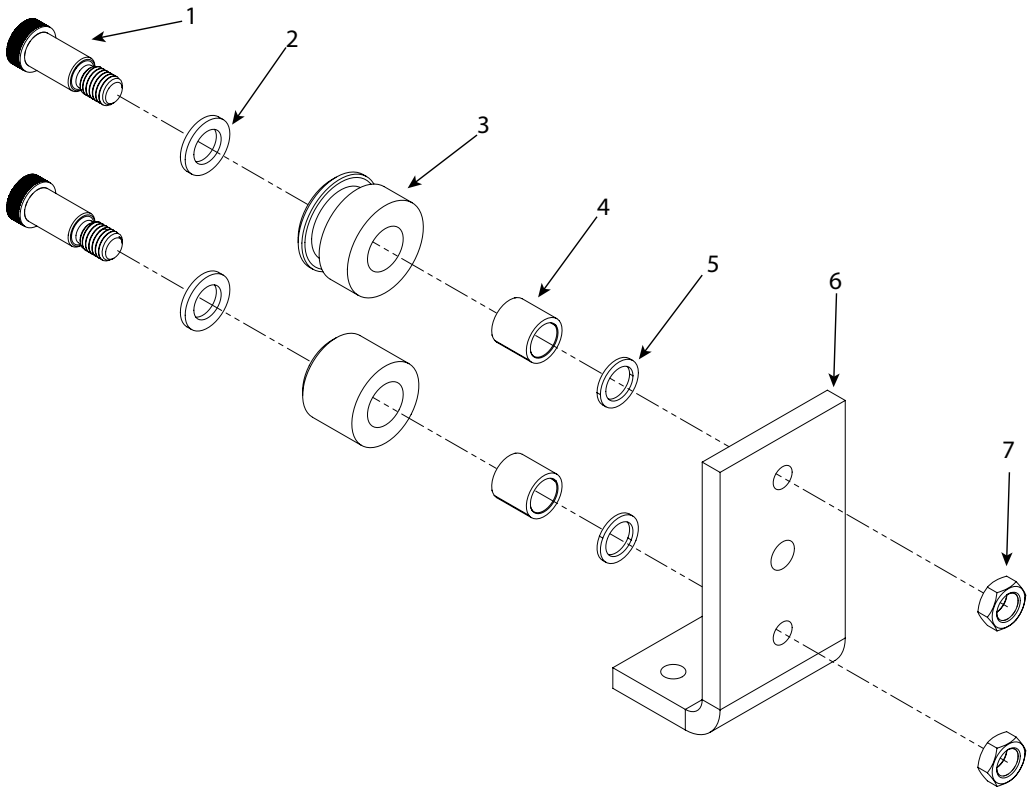

Ref#	Description	Part#
1	Roller Shoulder Bolt	896394
2	3/4 X 1-1/4 Machinery Bushing, 10ga Zinc	400146Z
3	Top Roller	896391
4	RSI-1216-16	896393
5	Roller Thrust Washer	896392
6	Plated Roller Holder Part	896398
7	5/8-11 Hex Jam Nut SS 18-8	000681SS

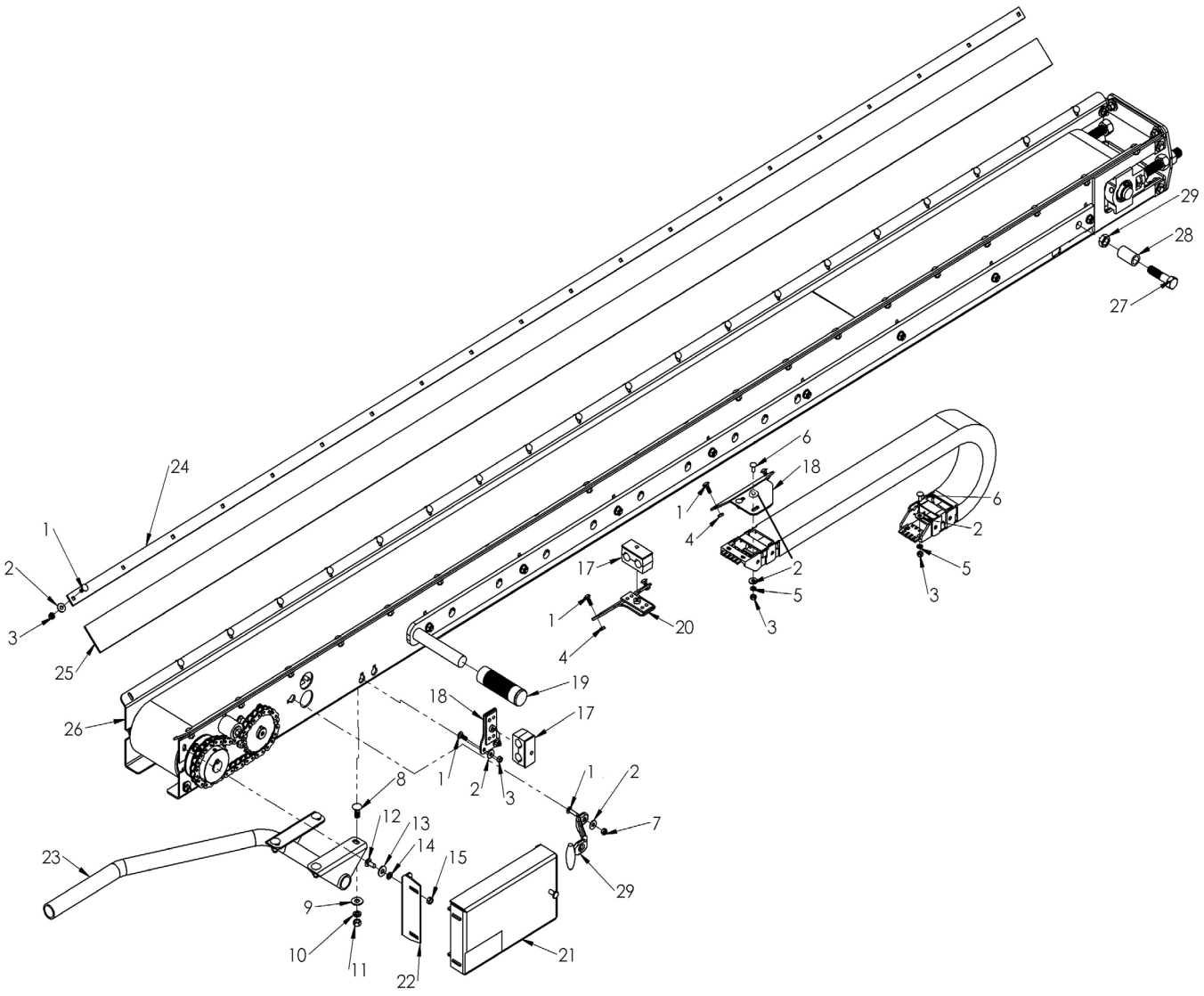
1
2
3
24
25
26
29
28
27
6
18
4
2
5
17
20
19
8
12
13
14
15
9
10
11
22
21
23
7

Ref#	Description	Part#
1	1/4-20 x 3/4" Carriage Bolt, SS	000161SS
2	1/4 USS Flat Washer, Stainless	001020SS
3	1/4-20 Hex Nut, Stainless	000900SS
4	1/4-20 Lock Jam Nut, Stainless	003003SS
5	1/4 Lock Washer, Stainless	000805SS
6	1/4-20 x 1 Hex Head Bolt, Stainless	000148SS
7	1/4-20 Nylon Lock Nut, Stainless	003001SS
8	3/8-16 x 1 Carriage Bolt, Stainless	000125SS
9	3/8 USS Flat Washer, Stainless	001035SS
10	3/8 Lock Washer, Stainless	000820SS
11	3/8-16 Hex Nut, Stainless	000915SS
12	5/16-18 x 3/4 Carriage Bolt, Stainless	000121SS
13	5/16 USS Flat Washer, Stainless	001030SS
14	5/16 Lock Washer, Stainless	000810SS
15	5/16-18 Hex Nut, Stainless	000910SS
17	1/2" Hose Clamp	896415
18	Hose Track Upper Holder	896366
19	Rubber Handle	896405
20	Middle Hose Holder	896357
21	Shield Weldment	896386
22	Shield Bracket	896387
23	Guard Weldment Left	896400
	Guard Weldment Right	896403
24	Belting Bar	896100
25	Rubber Skirt, Conveyor	896101
26	Conveyor Assembly	896356
27	5/8-11 x 2-1/2 Hex Head Bolt	000620
28	Stop Tube	896365
29	Rubber Latch	400092

20 DUAL CONVEYOR ASSEMBLY (BELTING)

SF5 Spreader

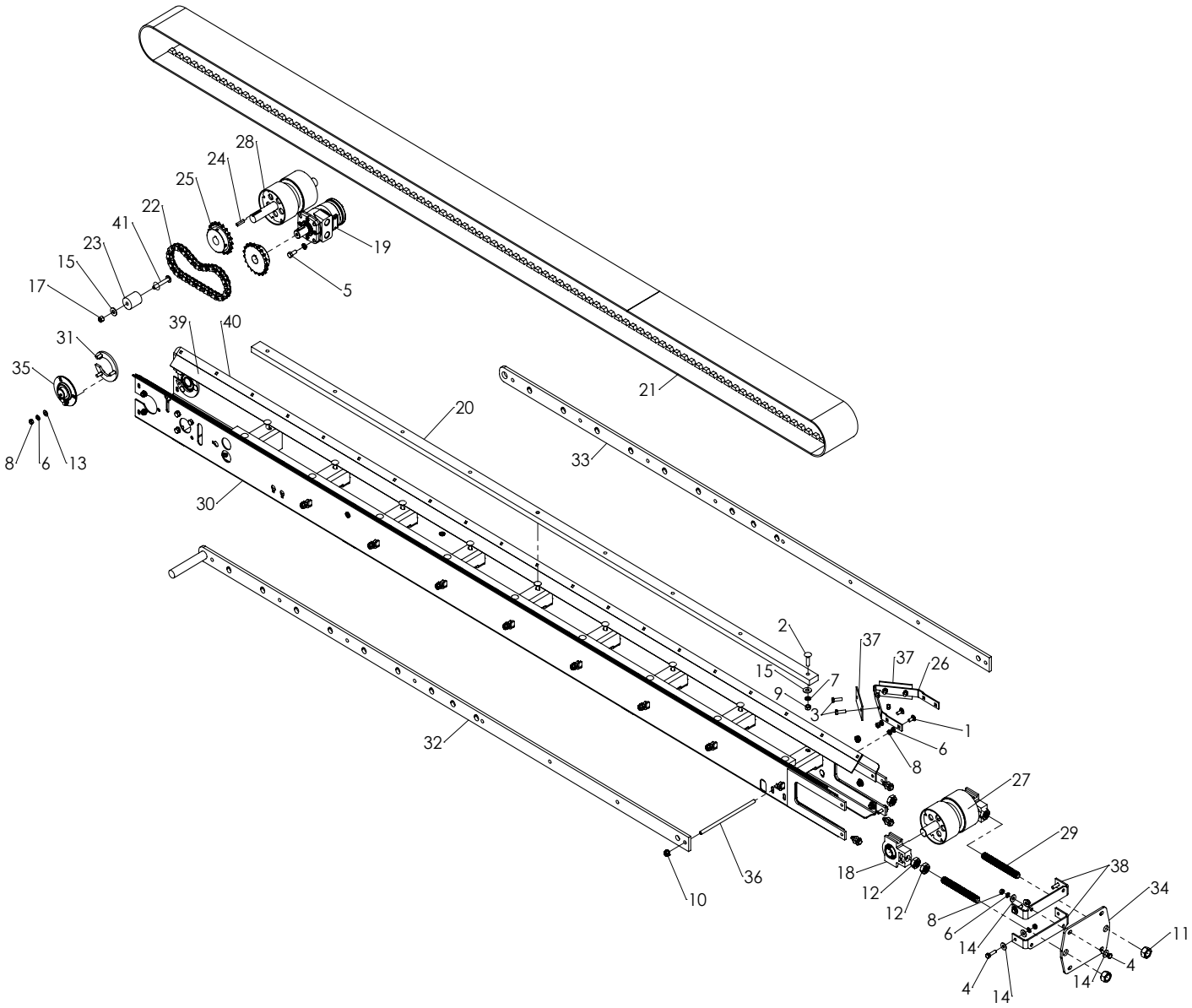

Ref#	Description	Part#	Qty
1	5/16-18 X .75 CARRIAGE BOLT, Stainless	000121SS	4
2	3/8-16 x 1-1/2" Carriage Bolt, Stainless	000151SS	18
3	5/16 x 1 HH Bolt, Stainless	000221SS	4
4	5/16-18 x 1-1/4 Hex Head Bolt, Stainless	000230SS	8
5	3/8-16 x .875 HH Bolt, Zinc	000250	4
6	5/16 Lock Washer, Stainless	000810SS	18
7	3/8 Split Lock Washer, Stainless	000820SS	22
9	3/8-16 HEX NUT, Stainless	000915SS	18
10	3/8-16 Serrated Flange Nut, Stainless	000916SS	16
11	3/4-10 Hex Nut, Zinc	000975	2
12	3/4-10 Hex Jam Nut	000976	6
13	5/16 Washer, Stainless	001022SS	6
14	5/16 USS Flat Washer, Stainless	001030SS	22
15	3/8 Washer	001035SS	19
16	5/16-18 Nylon Lock Nut	002999SS	4
17	3/8-16 Nylon Lock Nut, Stainless	003000SS	1
18	1" Takeup Bearing	806106	2
19	101-1011 Motor	890164	1
20	3/4 X 1.5" Poly Board	896112	2

Ref#	Description	Part#	Qty
21	5.5 x 234" Flat top belt, Type B V-bottom	896119	1
22	#50 Roller Chain	896120	1
23	Chain Idler	896132	1
24	.25 x 1.5" Key	896150	2
25	Chain Sprocket. #50-5/8, 19T	896157	2
26	Belt Scraper Bracket	896265	1
27	Conveyor Pulley (Drive Side)	896328	1
28	Conveyor Pulley (Tension Side)	896330	1
29	Chain Sprocket, #50-5/8, 19T	896157	2
30	Conveyor Weldment	896350	1
31	Bolt Bracket	896360	2
32	Rail Outside Weldment	896377	1
33	Slider Bar	896379	1
34	Conveyor End Plate	896407	1
35	3 Bolt Round Flange Bearing	896409	2
36	Threader Conveyor Rod	896411	8
37	Rubber Scraper	896412	2
38	Conveyor End Bracket	896419	2
39	Rubber Skirt, Cross Conveyor	896101	2
40	Belting Bar	896100	2
41	3/8-16 X 2.5" Carriage Bolt, Stainless	000144SS	1

DUAL CONVEYOR ASSEMBLY HYDRAULICS
xxxxx-96537

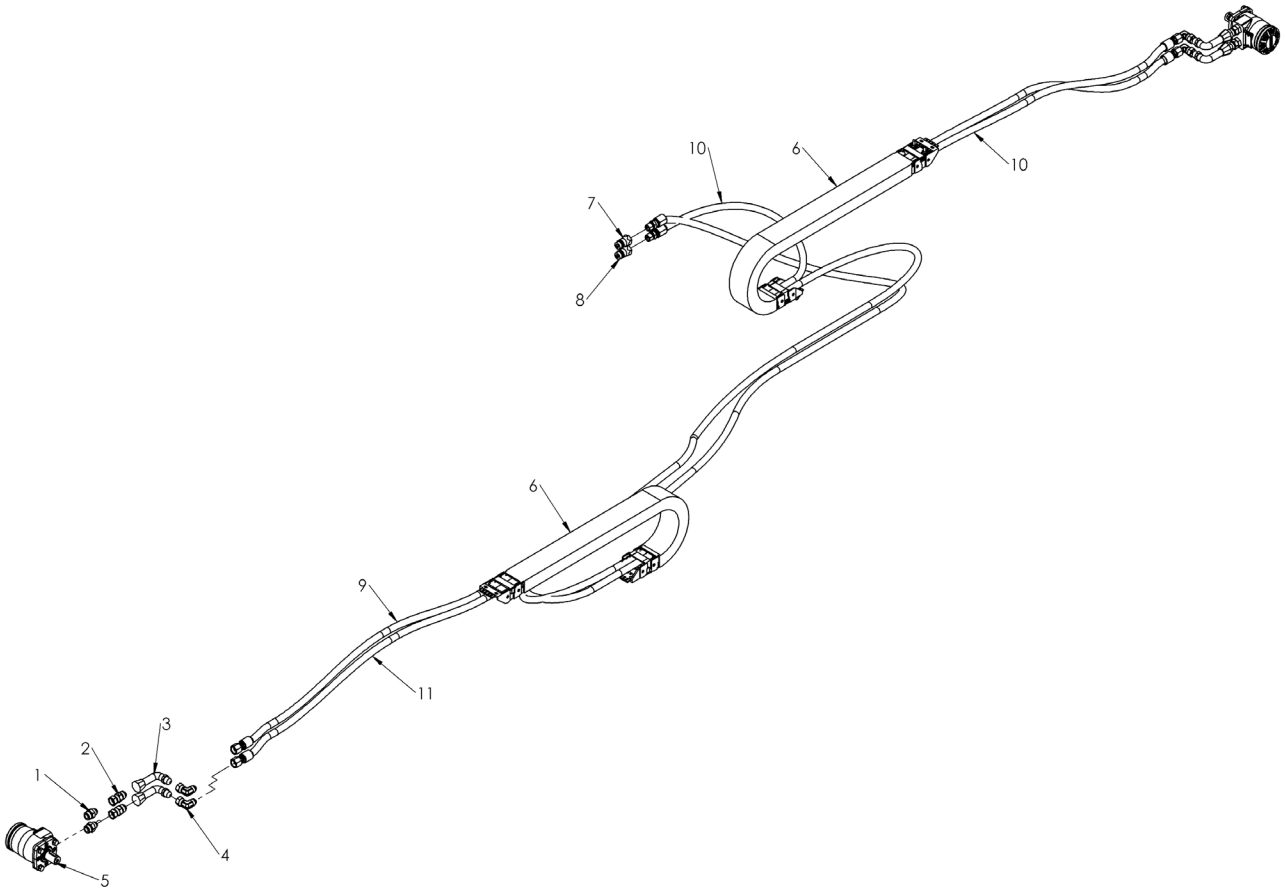

Ref#	Description	Part#	Qty
1	Straight Fitting, 8 MJ x 10 MB	900190	4
2	Fitting, Adaptor 8 FJX x 8 MJ	896165	4
3	Fitting, 90° 8FJX x 8MJ, Long	896166	4
4	Fitting, 90° 8FJX x 8MJ	896168	4
5	101-1011 Hydraulic Motor	890164	2
6	Hose Track, 1/2" Hose x 48" Tavel	896191	2
7	1/2" Male Ag Quick Coupler	290105	1
8	1/2" Female Ag Quick Coupler	290183	1
9	Hose Assy, 207" x 8FJX x 8MP	896195	1
10	Hose Assy, 109" x 8FJX x 8MP	896196	1
11	Hose Assy, 272" x 8FJX x 8FJX	896197	1

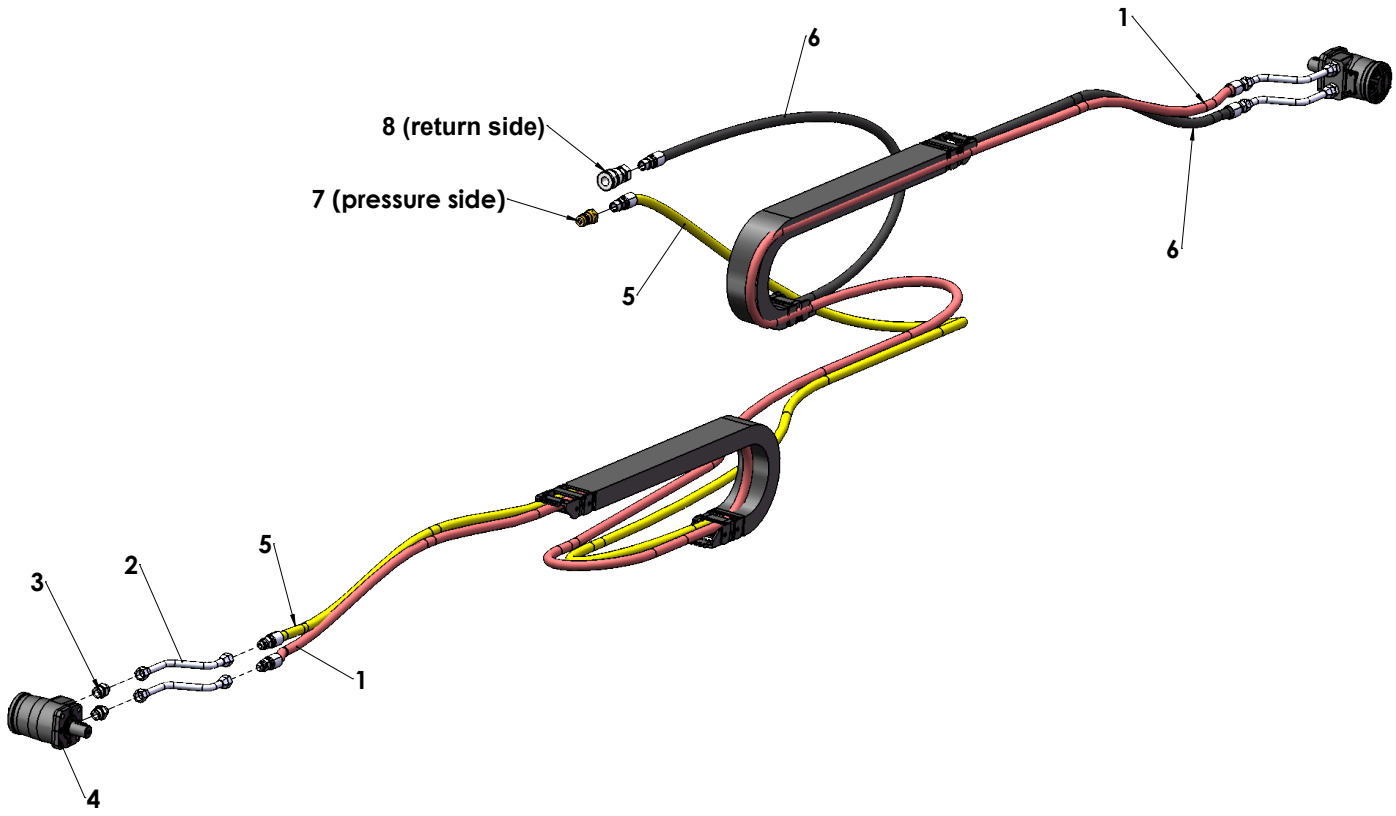

Ref#	Description	Part#	Qty
1	Hose Assy, 270” x 8MJ x 8MJ	896447	1
2	8MJ x 8MJ long bent tube adaptor	896434	4
3	Straight Fitting, 8 MJ x 10 MB	900190	4
4	101-1011 Hydraulic Motor	896164	2
5	Hose Assy, 205” x 8 MJ x 8MP	890446	1
6	Hose Assy, 107” x 8 MJ x 8 MP	896448	1
7	1/2" Male Ag Quick Coupler	290105	1
8	1/2" Female Ag Quick Coupler	290183	1

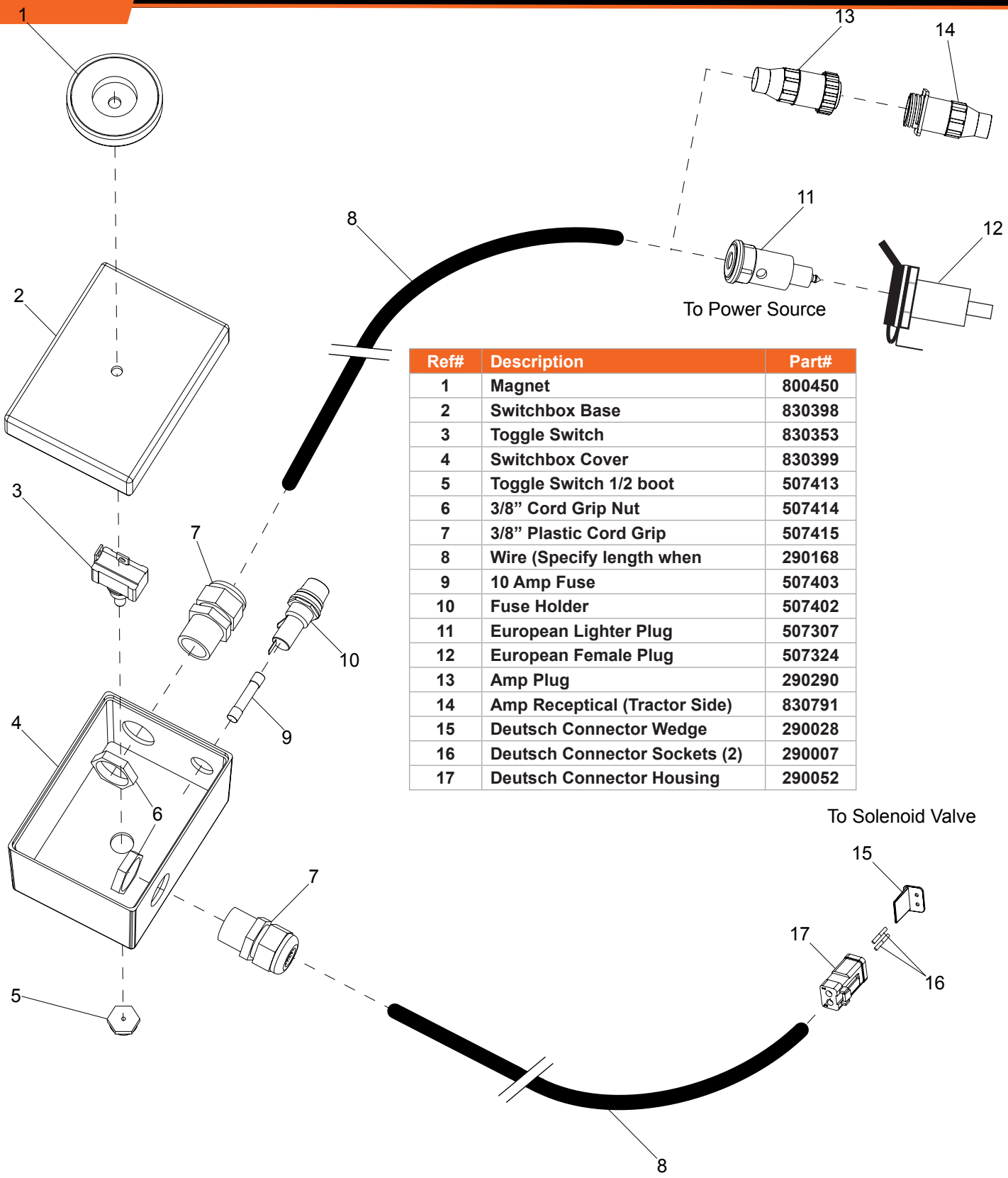

Ref#	Description	Part#
1	Magnet	800450
2	Switchbox Base	830398
3	Toggle Switch	830353
4	Switchbox Cover	830399
5	Toggle Switch 1/2 boot	507413
6	3/8” Cord Grip Nut	507414
7	3/8” Plastic Cord Grip	507415
8	Wire (Specify length when	290168
9	10 Amp Fuse	507403
10	Fuse Holder	507402
11	European Lighter Plug	507307
12	European Female Plug	507324
13	Amp Plug	290290
14	Amp Receptical (Tractor Side)	830791
15	Deutsch Connector Wedge	290028
16	Deutsch Connector Sockets (2)	290007
17	Deutsch Connector Housing	290052

OIL COOLER OPTION

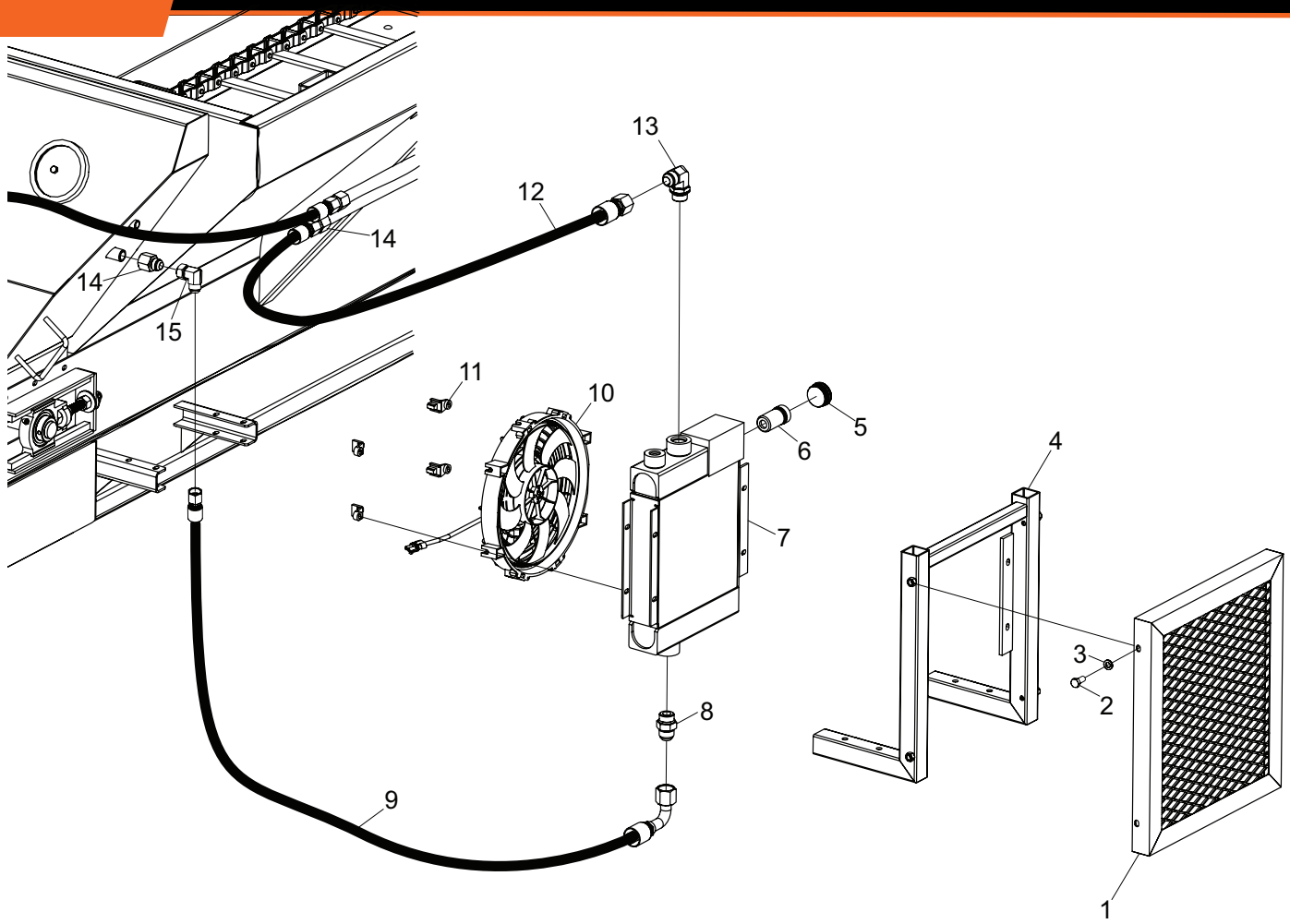

Ref#	Description	Part#
1	Cooler Grill Weldment	801166
2	5/16-18 x 3/4 Truss Head Bolt, Zinc	000210
3	5/16 Lock Washer, Zinc	000810
4	Cooler Frame Weldment	801160
5	#20 Plug	890459
6	Oil Cooler Check Valve	890462
7	Oil Cooler Core	890463
8	Straight Fitting, #12 MJ x #12 MB	290065
9	45-1/2” Hose Assembly (12FJX90S - 12FJX)	891211
10	Oil Cooler Fan W/Shroud	890460
11	Oil Cooler Fan Mounting Bracket	890461
12	27” Hose Assembly (12FJX - 12FJX)	890357
13	90 Degree Fitting, #12 MJ x #12 MB	290022
14	Straight Fitting,- #12 MJ x #12 FP	290019
15	90 Degree Elbow,- #12 MJ x #12 FJX	290150
16	Complete Oil Cooler	890209

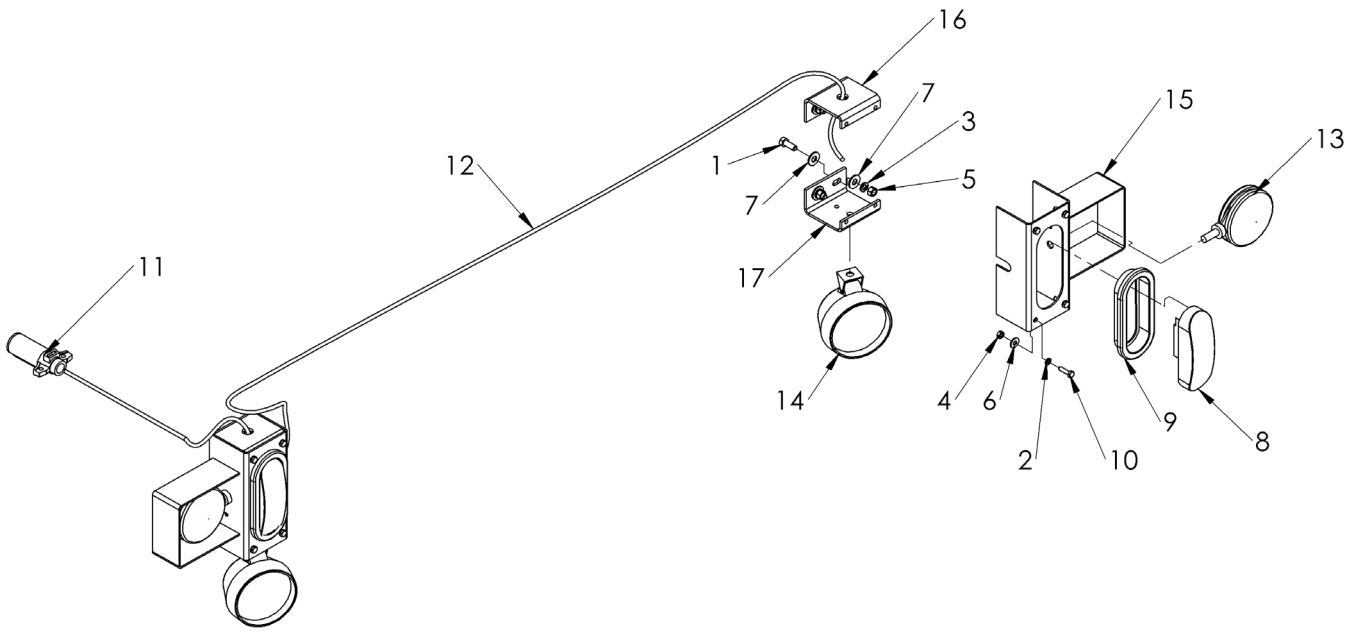

Ref#	Description	Part#	Qty
1	3/8-16 x 1.000 HH Bolt Zinc, Stainless	000270SS	8
2	1/4 Split Lock Washer, Stainless	000805SS	8
3	3/8 Split Lock Washer, Stainless	000820SS	8
4	1/4-20 Hex Nut Zinc, Stainless	000900SS	8
5	3/8-16 Hex Nut zinc, Stainless	000915SS	8
6	1/4 USS Flat Washer,Stainless	001020SS	8
7	3/8 USS Flat Washer, Stainless	001035SS	16
8	6" Oval Tail Light	100055	2
9	6" Oval Tail Light Grommet	100140	2
10	1/4-20 x 1 HH Bolt, Gr5	100148	8
11	Cole Hersee Plug	100447	1
12	(SF5) Trailer Cable, 6 Contact 14 GA	290253	1
13	Light, Pedistal Mount Dual Face	507164	2
14	Flood Light	507176	2
15	Light Box Weldment	702506	2
16	Light Bracket Mount, top	890523	2
17	Light Bracket Mount, BOTTOM	890524	2

DUAL SIDE DEFLECTOR OPT. (894003 - 8”TALL - JAN 2025+)

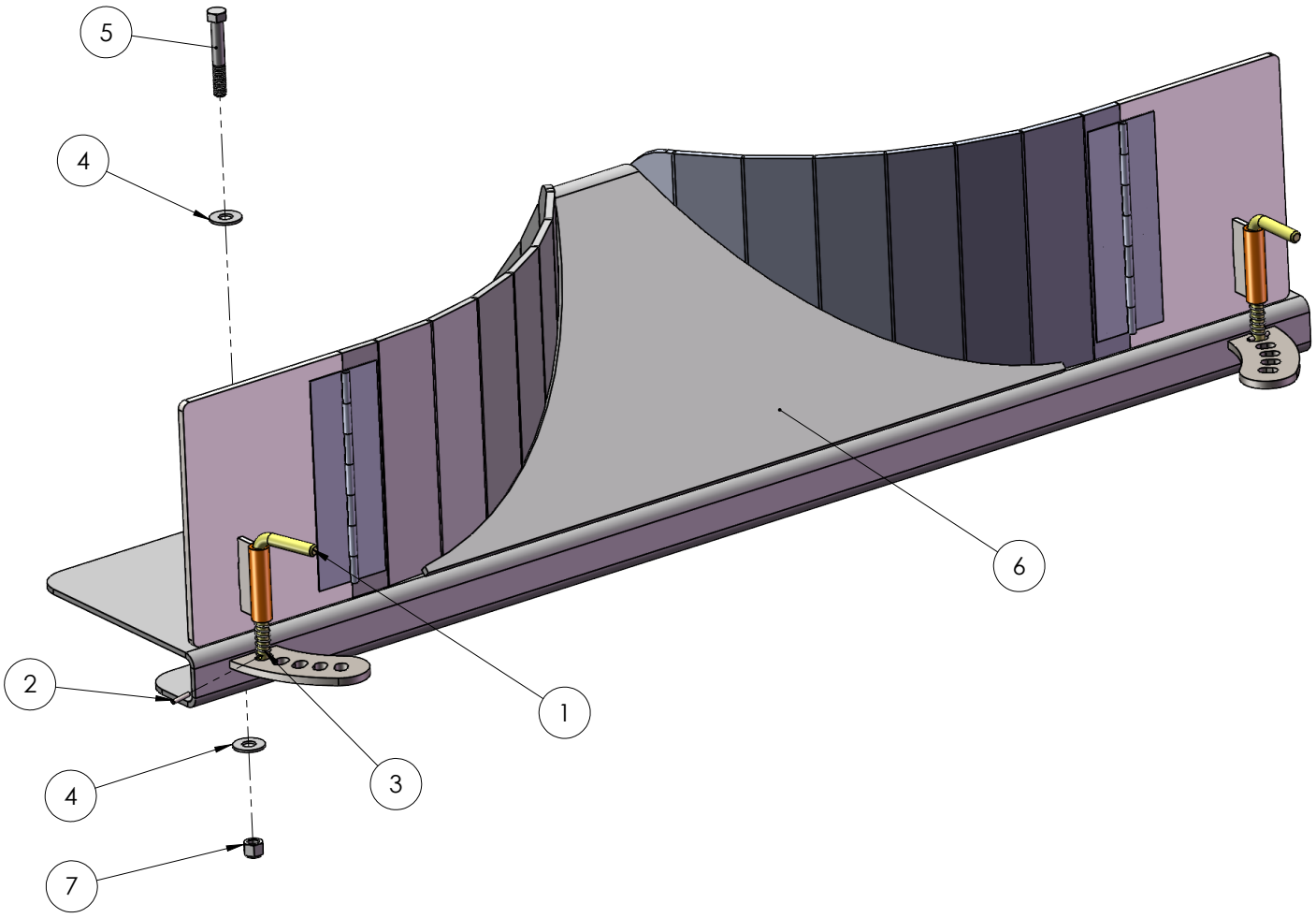

Ref#	Description	Part#	Qty
1	Latch Pin SS	806052	2
2	1/8 x 3/4 SS Roll Pin	000561	2
3	Spring SS	806166	2
4	3/8 USS Flat Washer	001035	4
5	3/8 x 2 1/2 Hex Head Bolt	000300	2
6	Spinner Deflector Weldment	890654	1
7	3/8-16 Nylon Lock Nut	003000	2

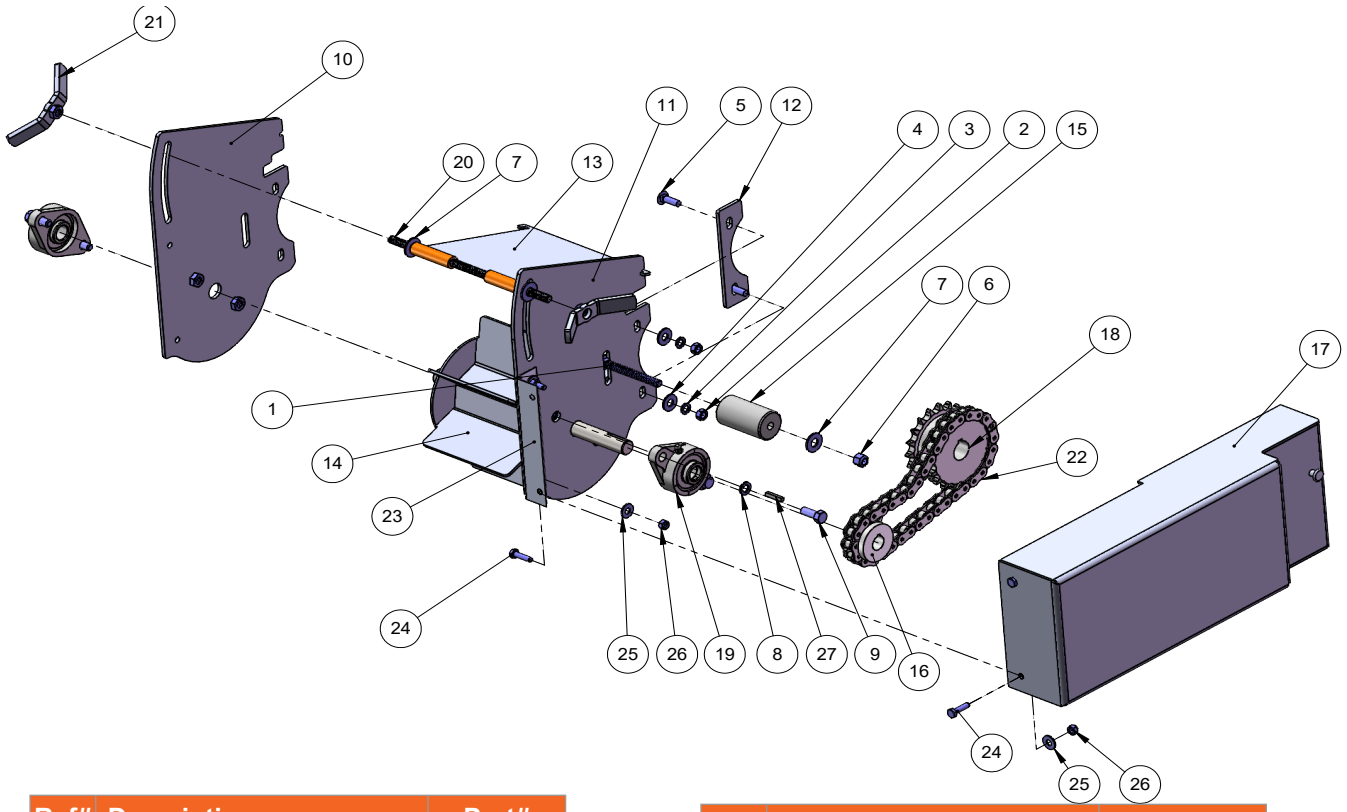

Ref#	Description	Part#
1	3/8-16 x 3 1/2 Stainless Steel Carriage Bolt	010003SS
2	5/16-18 S.S. HEX NUT	000910SS
3	5/16 S.S. Lock Washer	000810SS
4	5/16 USS Flat Washer, STAINLESS	001030SS
5	5/16” - 18 x 1” Carriage Bolt, Stainless	000124SS
6	3/8-16 S.S. NYLON LOCK NUT	003000SS
7	3/8” SS WASHER	001035SS
8	3/8 Split Lock Washer	000820SS
9	3/8-16 x 1.000 HH Bolt Stainless	000270SS
10	Left Front SF5 Flicker Weldment	896539
11	Right Front SF5 Flicker Plate Weldment	896540
12	SF5 Flicker Side Plate Spacer	896505
13	SF5 Flicker Adjuster Asm	896517
14	SF5 Flicker Spindle Asm	896509

Ref#	Description	Part#
15	SF5 Flicker Chain Tensioner	896506
16	FLICKER DRIVE SPROCKET	896525
17	SF5 Flicker Chain Cover Asm	896520
18	Chain Double Sprocket, #50-5/8, 19T	896524
19	.750 2 bolt flange	806108
20	Grade B8 18-8 Stainless Steel Threaded Rod	896508
21	Stainless Tightener Handle Weldment	890296
22	#50 Roller CHAIN	896514
23	SF5 Flicker Shield Hinge	896511
24	1/4-20 x 1 HH Bolt, STAINLESS	100148
25	1/4 USS Flat Washer STAINLESS	001020SS
26	1/4-20 Nylon Lock Nut	003001SS
27	3/16 x 1” Key	896538