PEQUEA

Tradition In Progress ®

CX551 Wood Chipper

Illustrated Parts Breakdown

Page 1 Base Assembly

Page 2 Feed Roller Carriage

Page 3 Hopper Assembly

Page 4 Rotor Housing S/N -94633

Page 6 Rotor Housing S/N 94633+

Page 8 PTO Shaft Assembly S/N 92970+

Page 9 Self Contained Hydraulics Option

Page 10 Auto Feed Option

Page 11 Hose Assembly - Self Contained

Page 12 Hose Assembly - Tractor Hydraulics

08/18/2016

CX551 Base Assembly

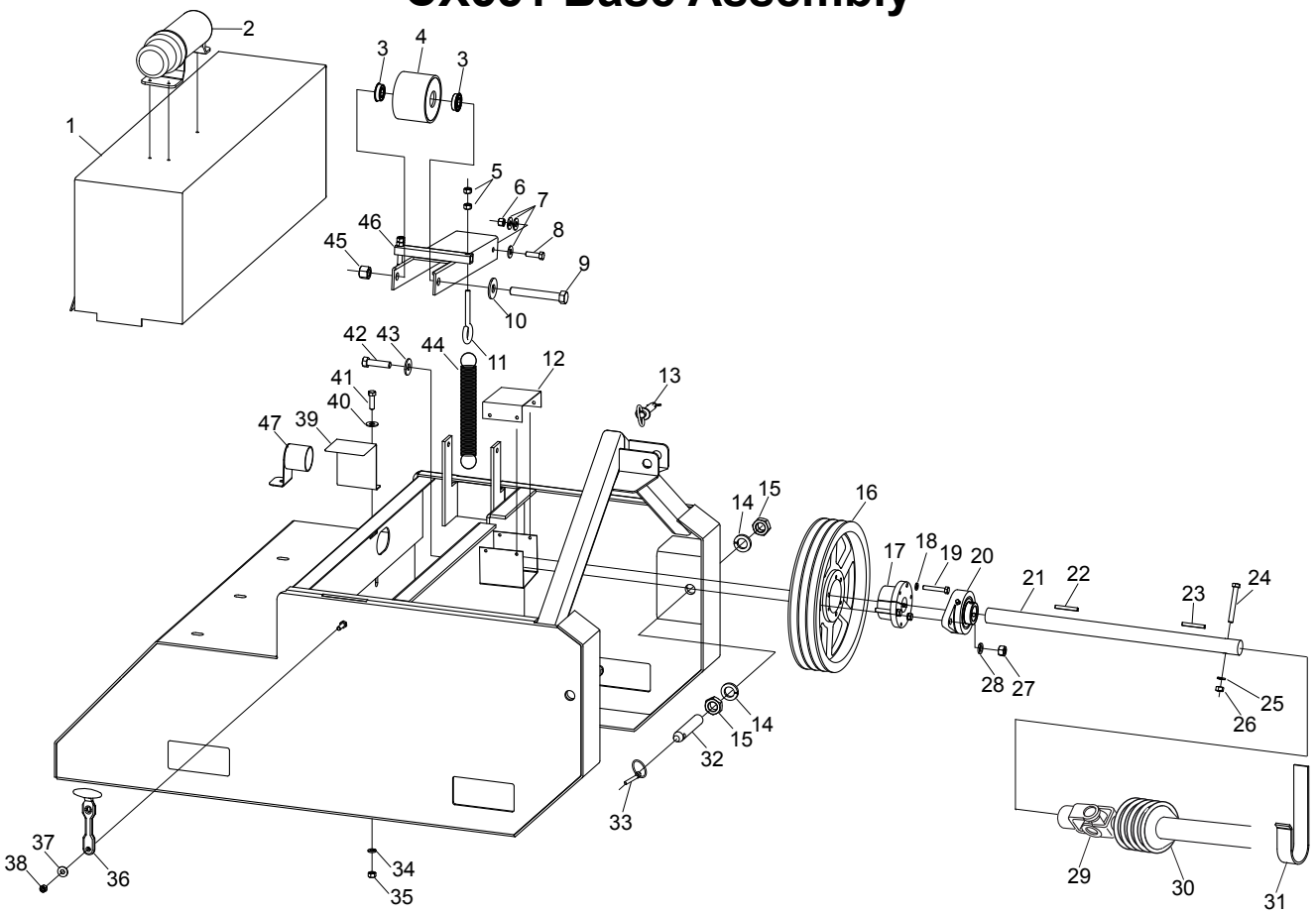

Ref#	Description	Part#
1	Belt Shield	902025
2	Owner's Manual Canister	503050
2a	Operator's Manual	990021
3	Insert Bearing	900150
4	Idler Roller	902023
5	Nut, 3/8	000915
6	Locknut, 3/8	003000
7	Flatwasher, 3/8	001035
8	Bolt, 3/8 x 1-1/4	000275
9	Bolt, 5/8 x 4-1/2	000645
10	Flatwasher, 5/8	001075
11	Eye Bolt, 3/8 x 3-1/4	902001
12	PTO Guard	900857
13	Hitch Pin	903143
14	Lock Washer, 7/8	N/A
15	Jam Nut, 7/8	N/A
16	Pulley, 12" 3-Groove	900113
17	Pulley Bushing w/ Bolts	900115
18	Lock Washer, 5/16	N/A
19	Bolt, 5/16 x 2	N/A
20	Flange Bearing, 1-1/4	900112
21	Jack Shaft	900041
22	Key, 3/8 x 3/8 x 2	400857
23	Key, 1/4 x 1/4 x 2	400587

Ref#	Description	Part#
24	Shear Bolt, 3/8 x 3 Gr. 8	000306
25	Lock Washer, 3/8	000820
26	Nut, 3/8	000915
27	Nut, 1/2	000940
28	Lock Washer, 1/2	000840
29*	Comp. PTO w/ Keyed Yoke	900139
*	Comp. PTO w/ Shearbolt Yoke	900159
30	PTO Shield Kit--for Bondioli PTO's only	701080
31	PTO Shaft Cradle	900862
32	Lift Arm Pin w/ Nut & Washer	900110
33	Lynch Pin	500219
34	Lock Washer, 3/8	000820
35	Nut, 3/8	000915
36	Rubber T-Handle	400092
37	Flatwasher, 5/16	001030
38	Nut, 5/16	000910
39	Jack Shaft Shield	900019
40	Flatwasher, 3/8	001035
41	Bolt, 3/8 x 1	000270
42	Bolt, 1/2 x 2	000452
43	Flatwasher, 1/2	001055
44	Tension Spring	900162
45	Locknut, 5/8	000972
46	Idler Arm	902024
47	Guard	900467

CX551 Feed Roller Carriage

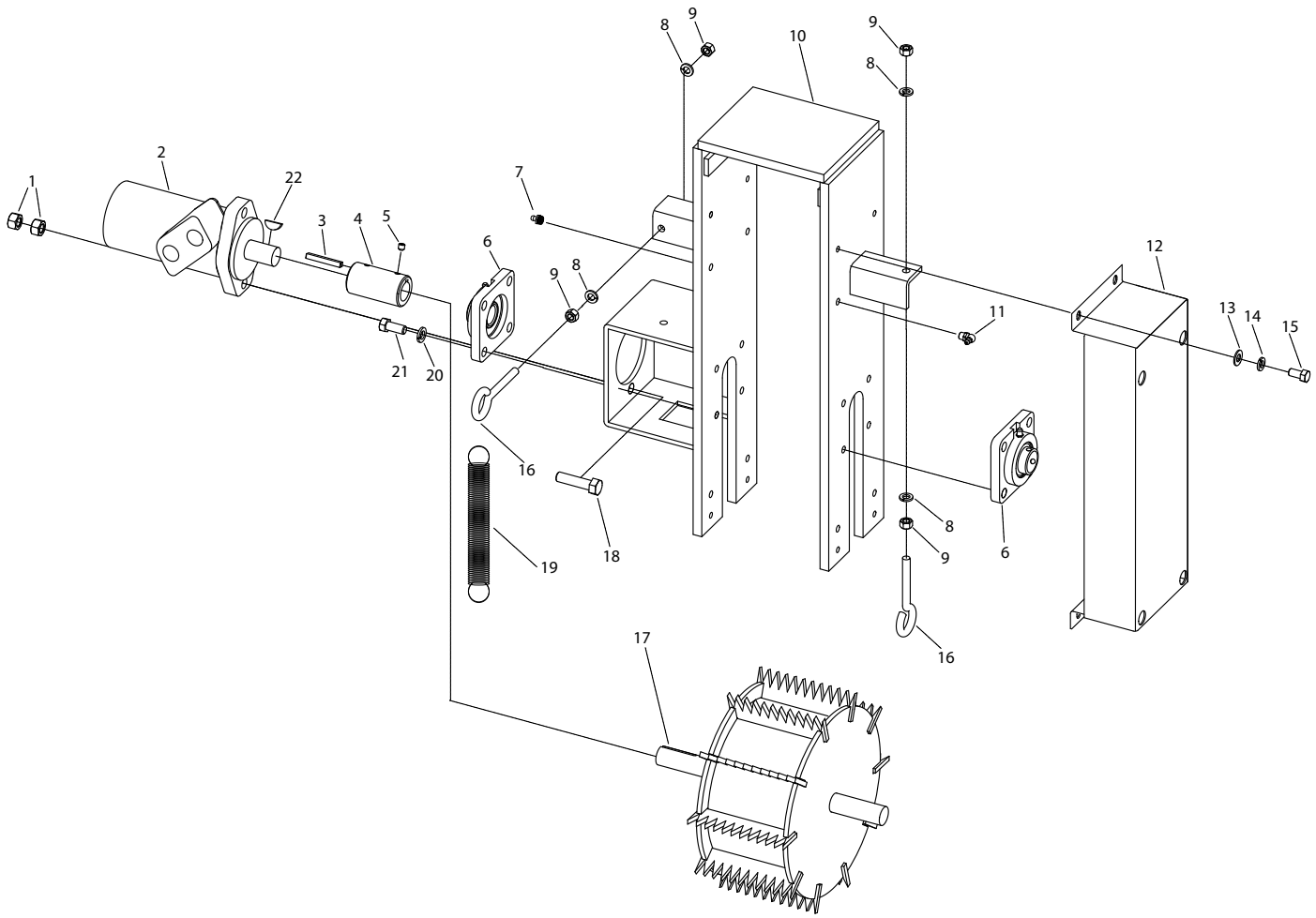

Ref#	Description	Part#
1	Nut, 7/16	000935
2	Hydraulic Motor	900178
3	1/4 Square Key x 1-1/4	400115
4	Shaft Coupler w/ Set Screw	900482
5	Set Screw, 5/16 x 5/16	001118
6	Flange Bearing	700053
7	Grease Fitting	400118
8	Lock Washer, 3/8	000820
9	Nut, 3/8	000915
10	Feed Roller Carriage	902031
11	Grease Fitting	900044

Ref#	Description	Part#
12	Spring Shield	902029
13	Flat Washer, 3/8	001035
14	Lock Washer, 3/8	000820
15	Bolt, 3/8 x 3/4	000245
16	Eye Bolt, 3/8 x 3-1/4	902001
17	Feed Roller	902030
18	Bolt, 7/16 x 2	000365
19	Tension Spring	900162
20	Lock Washer, 7/16	000830
21	Bolt, 7/16 x 1	000353
22	Half Moon Key, 1/4” x 1”	900863

CX551 Hopper Assembly

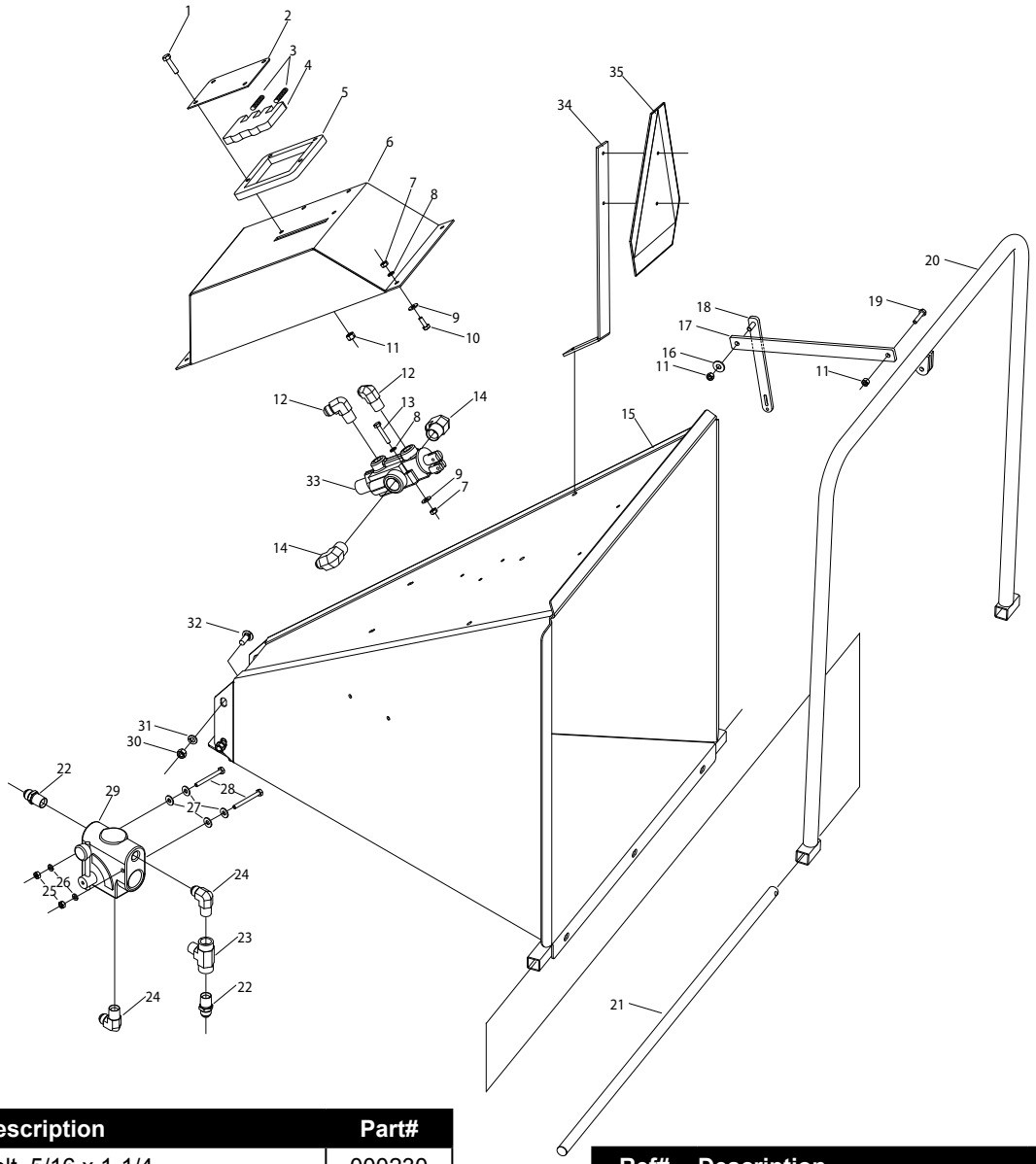

Ref#	Description	Part#
1	Bolt, 5/16 x 1-1/4	000230
2	Feed Control Cover	902039
3	Feed Control Springs	902040
4	Feed Control, Inner	902038
5	Feed Control, Outer	902037
6	Valve Cover	902034
7	Nut, 1/4	000900
8	Lock Washer, 1/4	000805
9	Flatwasher, 1/4	001020
10	Bolt, 1/4 x 3/4	000175
11	Locknut, 5/16	002999
12	Hydraulic Elbow Fitting	900172
13	Bolt, 1/4 x 1-1/2	000185
14	Hydraulic Elbow Fitting	900171
15	Hopper	902043
16	Flatwasher, 5/16	001030
17	Control Bar Linkage	902036
18	Valve Linkage	902035

Ref#	Description	Part#
19	Bolt, 5/16 x 1-1/4	000230
20	Control Bar	902041
21	Control Bar Pin	902252
22	Hydraulic Fitting	900186
23	Hydraulic “T” Fitting	900189
24	Hydraulic Elbow Fitting	900172
25	Nut, 1/4	000900
26	Lockwasher, 1/4	000805
27	Flatwasher, 1/4	001020
28	Bolt, 1/4 x 2-1/2	000195
29	Flow Control Valve	900182
30	Nut, 3/8	000915
31	Lock Washer, 3/8	000820
32	Carriage Bolt, 3/8 x 1	000125
33	Directional Valve	900181
34	SMV Mounting Bracket	900860
35	SMV Triangle	507166

CX551 Rotor Housing Assembly S/N -94633

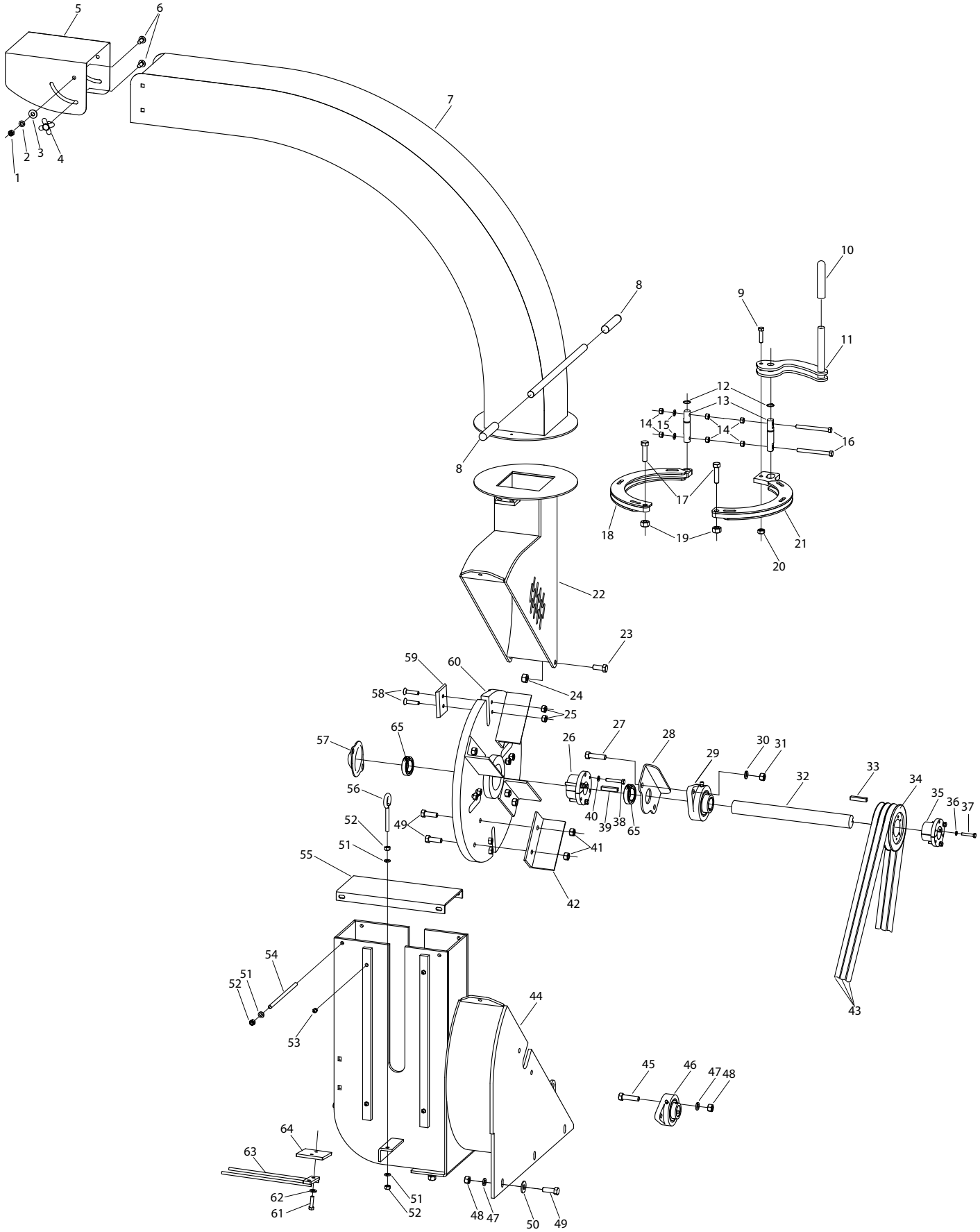

Previous Page Next Page Back to Index

CX551 Rotor Housing Assembly S/N -94633

Ref#	Description	Part#
1	Nut, 3/8	000915
2	Lock Washer, 3/8	000820
3	Flatwasher, 3/8	001035
4	Clamp Knob	900125
5	Deflector	900030
6	Carriage Bolt, 3/8 x 1	000125
7	Chip Chute	900047
8	Handle Grip	900116
9	Bolt, 3/8 x 1-1/2	000280
10	Handle Grip	900116
11	Clamp Handle	902018
12	Retaining Ring	902022
13	Clamp Pins	902021
14	Nut, 3/8	000915
15	Lock Washer, 3/8	000820
16	Bolt, 3/8 x 4 All Thread	902033
17	Bolt, 1/2 x 2	000452
18	Chute Retainer	902020
19	Steel Locknut, 1/2	900144
20	Steel Locknut, 3/8	900134
21	Chute Clamp	902019
22	Upper Rotor Housing	900048
23	Bolt, 1/2 x 1-1/2	000435
24	Steel Locknut, 1/2	900144
25	Steel Locknut, 3/8	900134
26	Rotor Bushing w/ Bolts	900104
27	Bolt, 1/2 x 2	000452
28	Bearing Bracket	900015
29	Flange Bearing, 1-1/2	900127
30	Lock Washer, 1/2	000840
31	Nut, 1/2	000940
32	Rotor Shaft	900039

Ref#	Description	Part#
33	Key, 3/8 x 3/8 x 2	400857
34	Pulley, 5" 3-Groove	700172
35	Pulley Bushing w/ Bolts	900108
36	Lock Washer 1/4	
37	Bolt, 1/4 x 1-7/8	
38	Bolt, 5/16 x 2	
39	Key, 3/8 x 3/8 x 2	400857
40	Lock Washer, 5/16	
41	Steel Locknut, 1/2	900144
42	Rotor Paddle	900031
43	Belt, B-58	900109
44	Lower Rotor Housing	902027
45	Bolt, 1/2 x 2	000452
46	Flange Bearing, 1-1/4	900112
47	Lock Washer, 1/2	000840
48	Nut, 1/2	000940
49	Bolt, 1/2 x 1-1/2	000435
50	Flatwasher, 1/2	001055
51	Lock Washer, 3/8	000820
52	Nut, 3/8	000915
53	Grease Fitting, Straight	400118
54	Roller Cover Bolt	902110
55	Feed Roller Cover	902032
56	Eye Bolt, 3/8 x 3-1/4	902001
57	Rotor Shaft Cover	900859
58	Recessed Head Bolt, 3/8 x 1-3/4	900129
59	Chipper Knife	900106
60	Chipper Rotor	900032
61	Bolt, 1/2 x 1	000405
62	Lock Washer, 1/2	000840
63	Anvil Adjuster	902336
64	Anvil	900014
65	Locking Collar	900157

CX551 Rotor Housing Assembly S/N 94633+

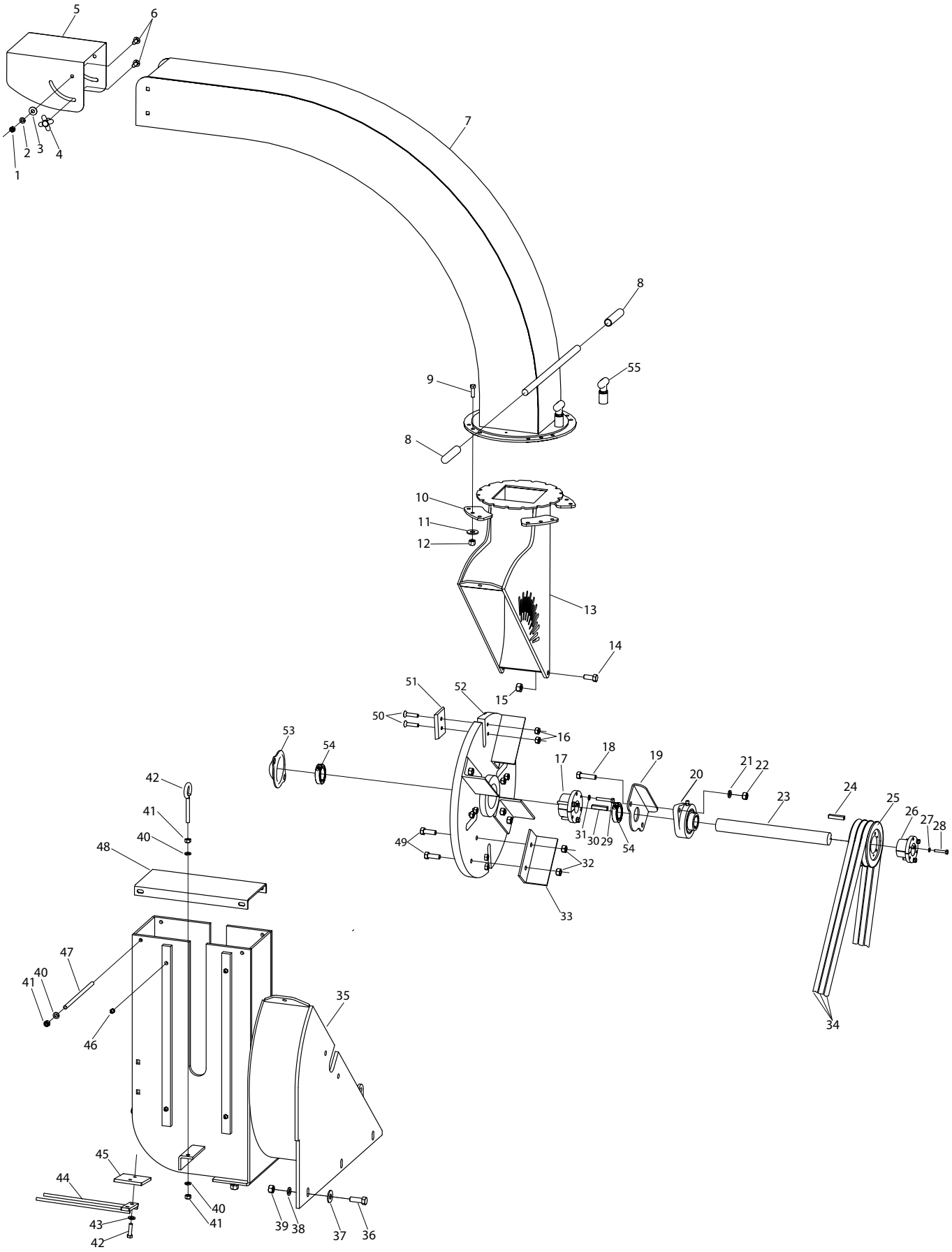

Previous Page Next Page Back to Index

CX551 Rotor Housing Assembly S/N 94633+

Ref#	Description	Part#
1	Nut, 3/8	000915
2	Lock Washer, 3/8	000820
3	Flatwasher, 3/8	001035
4	Clamp Knob	900125
5	Deflector	900030
6	Carriage Bolt, 3/8 x 1	000125
7	Chip Chute	900865
8	Handle Grip	900116
9	Bolt, 3/8 x 1”	000270
10	Chute Retainer	900869
11	3/8” Flat Washer	001035
12	3/8” Nylon Locknut	003000
13	Upper Rotor Housing	900864
14	Bolt, 1/2 x 1-1/2	000435
15	Steel Locknut, 1/2	900144
16	Steel Locknut, 3/8	900134
17	Rotor Bushing w/ Bolts	900104
18	Bolt, 1/2 x 2	000452
19	Bearing Bracket	900015
20	Flange Bearing, 1-1/2	900127
21	Lock Washer, 1/2	000840
22	Nut, 1/2	000940
23	Rotor Shaft	900039
24	Key, 3/8 x 3/8 x 2	400857
25	Pulley, 5” 3-Groove	700172
26	Pulley Bushing w/ Bolts	900108
27	Lock Washer 1/4	000805

Ref#	Description	Part#
28	Bolt, 1/4 x 1-7/8	000188
29	Bolt, 5/16 x 2	000122
30	Key, 3/8 x 3/8 x 2	400857
31	Lock Washer, 5/16	000810
32	Steel Locknut, 1/2	900144
33	Rotor Paddle	900031
34	Belt, B-58	900109
35	Lower Rotor Housing	902027
36	Bolt, 1/2 x 1-1/2	000435
37	Flatwasher, 1/2	001055
38	Lock Washer, 1/2	000840
39	Nut, 1/2	000940
40	Lock Washer, 3/8	000820
41	Nut, 3/8	000915
42	Bolt, 1/2 x 1	000405
43	Lock Washer, 1/2	000840
44	Anvil Adjuster	902336
45	Anvil	900014
46	Grease Fitting, Straight	400118
47	Roller Cover Bolt	902110
48	Feed Roller Cover	902032
49	Bolt, 1/2 x 1-1/2	000435
50	Recessed Head Bolt, 3/8 x 1-3/4	900129
51	Chipper Knife	900106
52	Chipper Rotor	900032
53	Rotor Shaft Cover	900859
54	Locking Collar	900157

PTO Shaft Assembly S/N 92970+

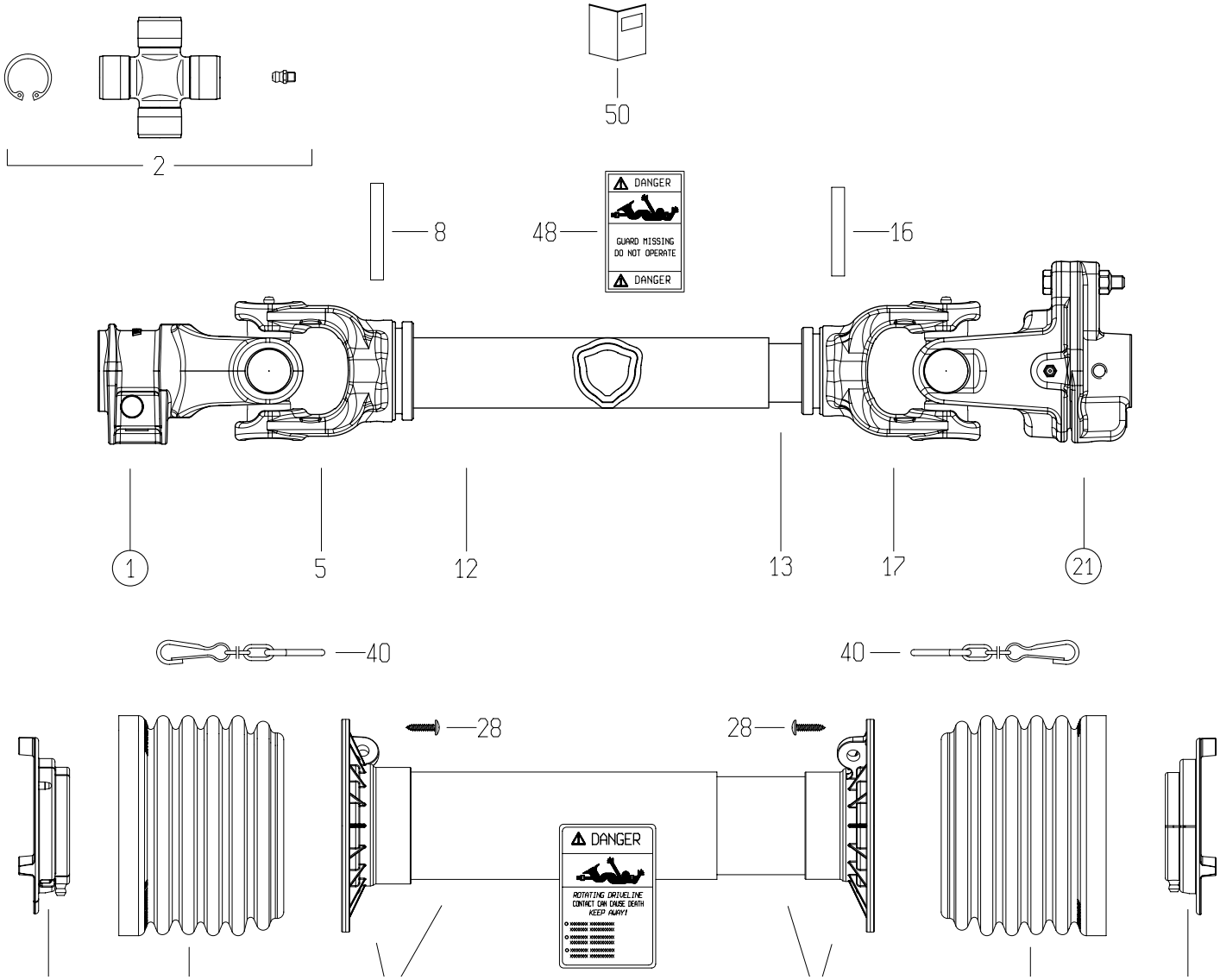

Ref#	Description	Part#
1	Yoke #4/S4 1-3/8”Z6 Shrouded Pin (007)	500427
2	Cross Kit S4-G4 27X74.6 Cap Zerk	500428
5	Tube Yoke #4-G4 Outer (43.5)	500429
8	Flexible Roll Pin 8X60 Din1481	500430
12	Cardan Tube 12508 L=480	900501
13	Cardan Tube 12507 L=480	900502
16	Flexible Roll Pin 8X55 Din1481	500433
17	Tube Yoke #4-G4 Inner (36.0)	500434
21	Lb4/S4 Clutch 1700Nm 1-1/4” Rb 1/4”Kw	900503
25	Shield	900504
26	Shield Support Outer G3-G4	500436
28	Screw 4.8X22 Self Tap Zinc	500417
29	Shield Tube Outer G4 *062* U2	900505

Ref#	Description	Part#
30	Shield Tube Inner G4 *062* U2	900506
32	Shield Support Inner G3-G4	500437
40	Shield Chain W/S-Hook L=500Mm	500420
48	Label - Danger - Outer Drive Tube	500421
49	Label - Danger - Outer Shield Tube	500422
50	Instruction Booklet - N.america Global	500423
51	Complete Push Pin 1-3/8”Z6/Z21	900507
71	Grease Fitting M6x1 Straight	900508
72	Bolt-Nut M8x45 Cl 8.8 Pkg-5	900509
93	Half Shaft Cleared	900510
94	Half Shaft Cleared	900511
97	Complete Shield Kit	900512
	Complete PTO Shaft	900139

CX551 Self Contained Hydraulics Option

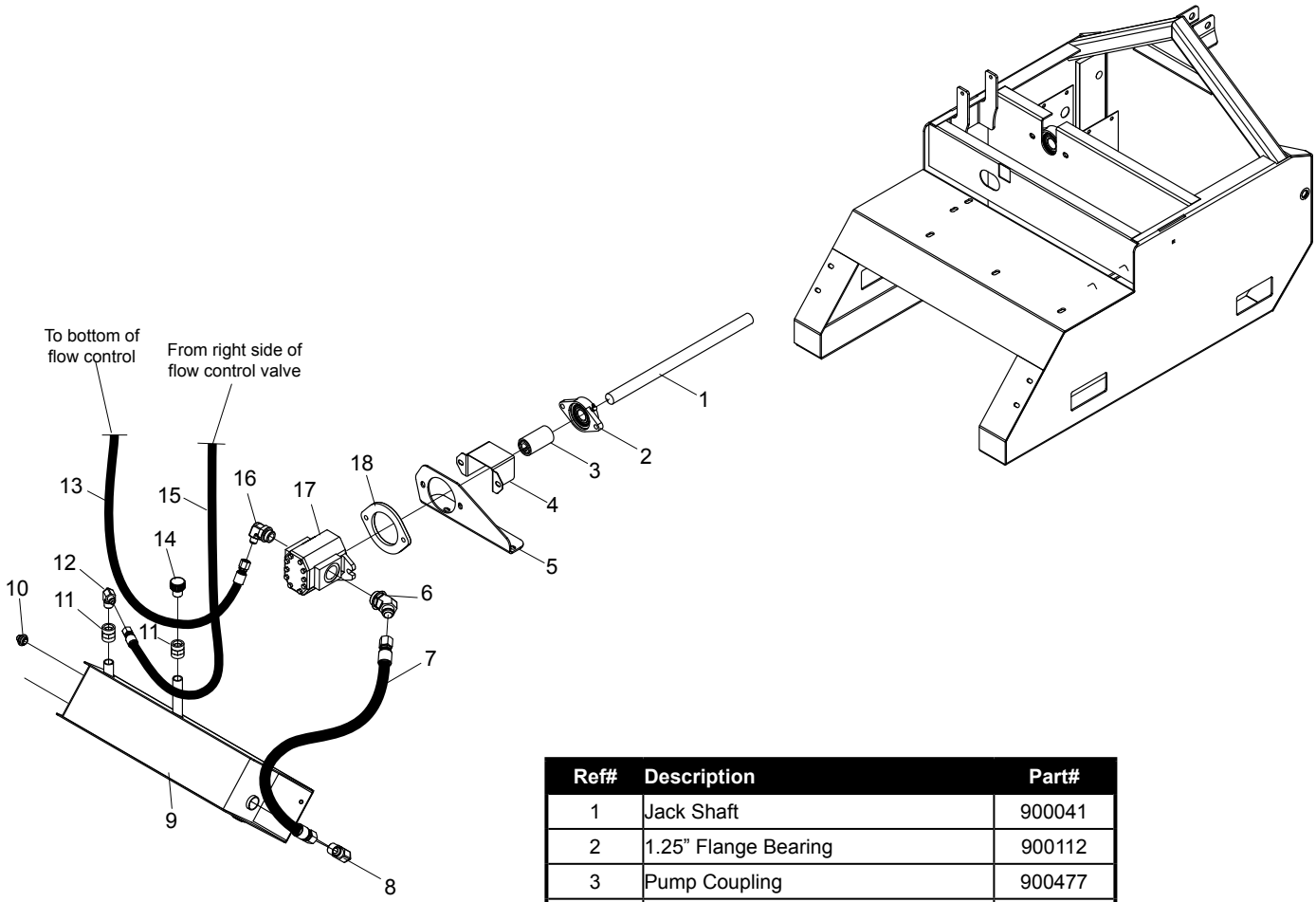

Ref#	Description	Part#
1	Jack Shaft	900041
2	1.25” Flange Bearing	900112
3	Pump Coupling	900477
4	Coupling Shield	900480
5	Pump Bracket	900478
6	45 Degree Fitting	900483
7	30” Hose Assembly	900322
8	Elbow Fitting, 2501-12-16	900330
9	Hydraulic Reservoir	900471
10	Hyd. Sight Guage	290262
11	Straight Fitting, 5000-12-12	290189
12	Elbow Fitting, 2501-8-12	900171
13	37” Hose Assembly	900320
14	Breather	900324
15	47” Hose Assembly	900321
16	Elbow Fitting, 6801-8-16	900329
17	Gear Pump	900323
18	Rubber Pad	900479

CX551 Auto Feed Option

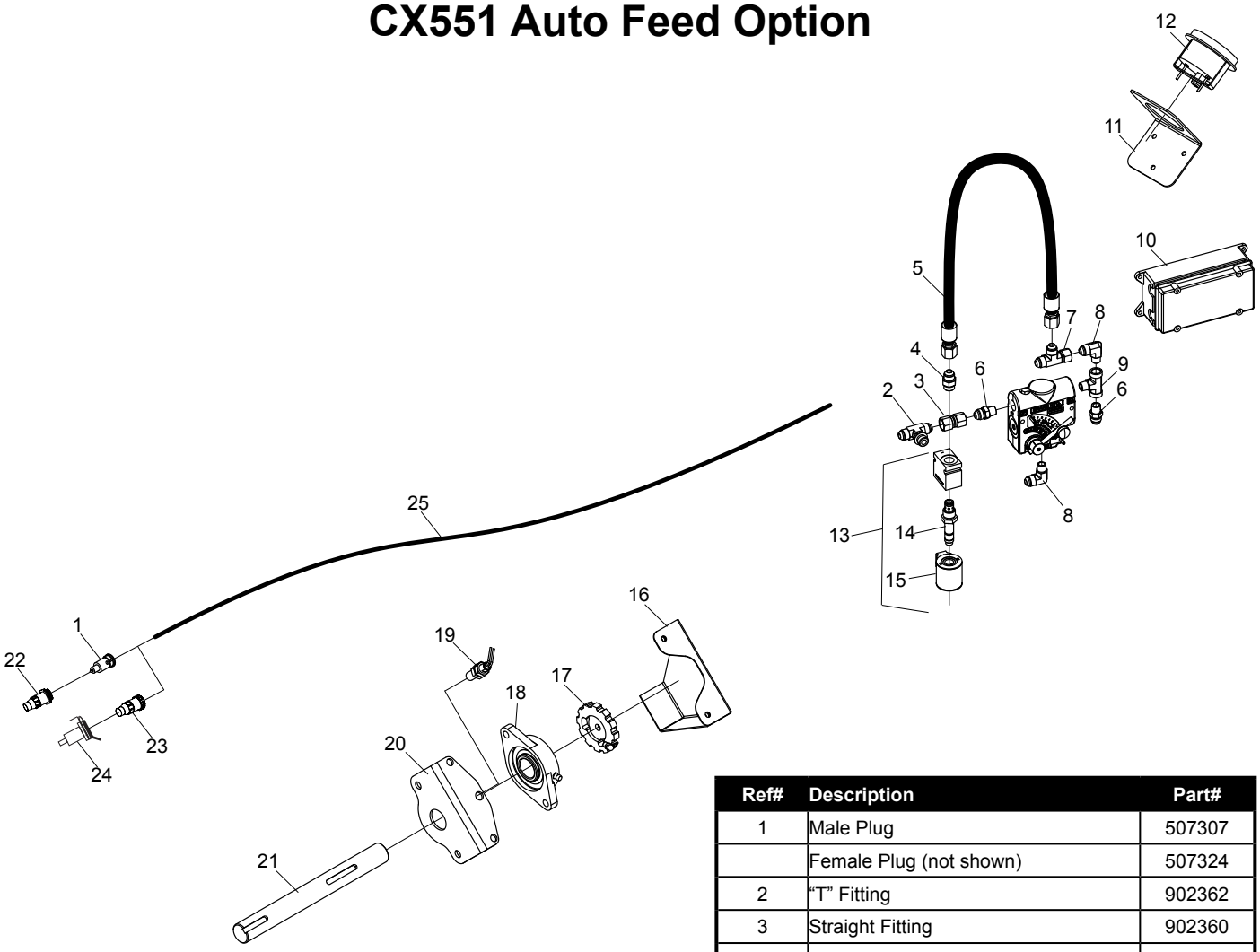

Ref#	Description	Part#
1	Male Plug	507307
	Female Plug (not shown)	507324
2	“T” Fitting	902362
3	Straight Fitting	902360
4	Straight Fitting	290126
5	Hose	902359
6	Straight Fitting	900186
7	“T” Fitting	902361
8	Elbow Fitting	900172
9	“T” Fitting	900189
10	Junction Box w/ Lid	290047
11	Speed Controller Bracket	902356
12	Speed Controller	900215
13	Dump Valve Assembly	903535
14	Valve	903556
15	Valve Coil	903557
16	Cover	902355
17	Sensor Wheel	902353
18	Flange Bearing, 1-1/2	900127
19	Magnetic Pickup Sensor	900216
20	Speed Sensor Bracket	902357
21	Rotor Shaft	900039
22	European Receptacle	507324
23	Amp Plug	290290
24	Amp Female Receptacle	830791
25	Wire (Specify Length when ordering)	290168

CX 551 Hose Assembly: Self Contained

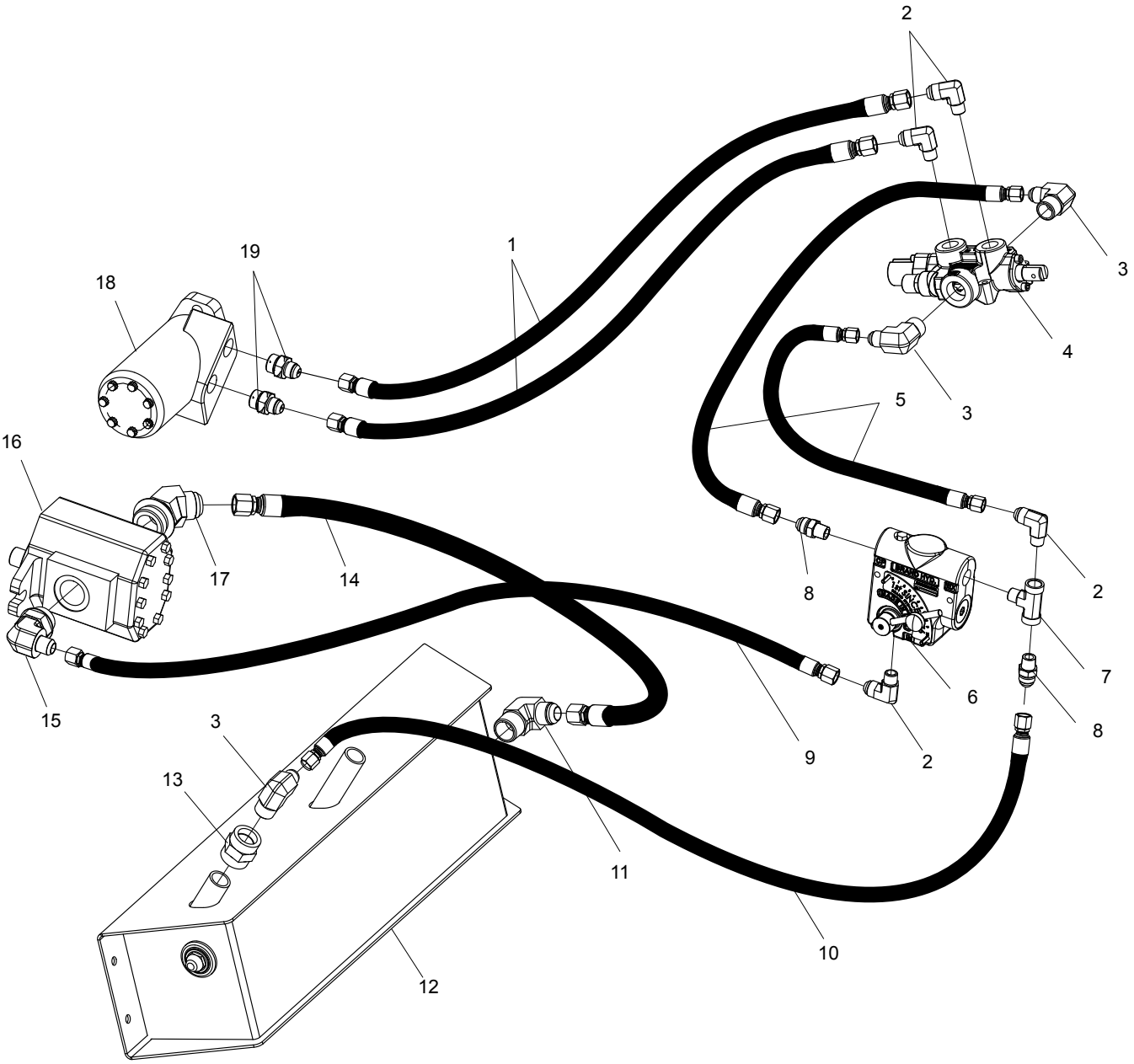

Ref #	Description	Part #
1	32” Hose Assembly	900184
2	90 Deg. Hydraulic Elbow Fitting	900172
3	Hydraulic Elbow Fitting	900171
4	Directional Control Valve	900181
5	24” Hose Assembly	900191
6	Flow Control Valve	900182
7	Hydraulic “T” Fitting	900189
8	Hydraulic Fitting	900186
9	37” Hose Assembly	900320
10	47” Hose Assembly	900321

Ref #	Description	Part #
11	Elbow Fitting, 2501-12-16	900330
12	Hydraulic Reservoir	900471
13	Straight Fitting, 5000-12-12	290189
14	30” Hose Assembly	900322
15	Elbow Fitting, 6801-8-16	900329
16	5.5 GPM Gear Pump	900323
17	45 Degree Fitting	900483
18	Hydraulic Motor	900180
19	Straight Fitting,	900190

CX 551 Hose Assembly: Tractor Hydraulics

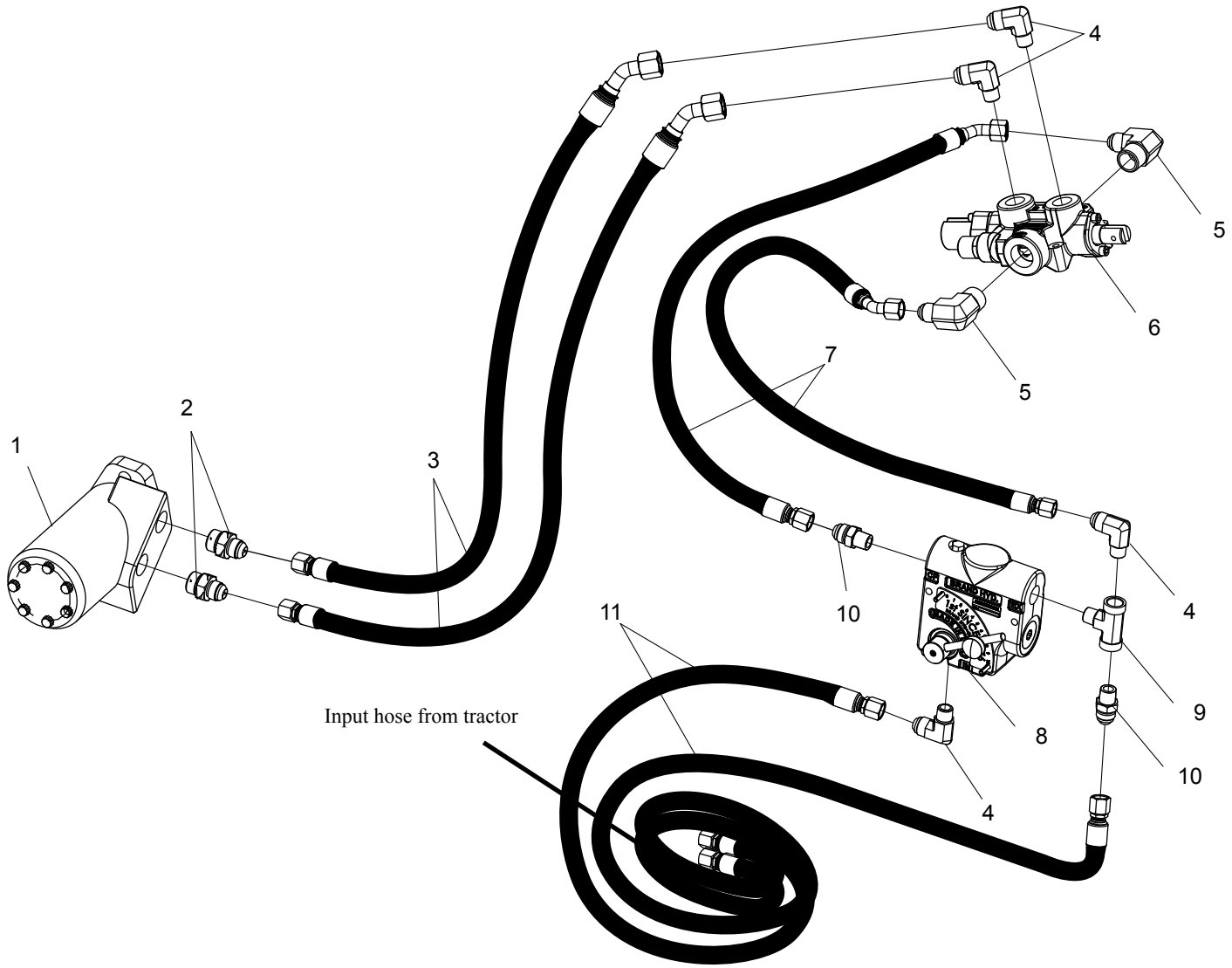

Ref #	Description	Part #
1	Hydraulic motor	900180
2	Hydraulic Straight Fitting- Motor	900190
3	32” Hose Assembly	900184
4	Right Angle Fittings	900172
5	Right Angle Fittings	900171
6	Directional Control Valve	900181
7	24” Hose Assembly	900191
8	Flow Control Valve	900182
9	Hydraulic “T” Fitting	900189
10	Hydraulic Straight Fitting	900186
11	108” Hose Assembly to PTO	900185